Installation and operation manual

Air-cooled refrigeration condensing unit

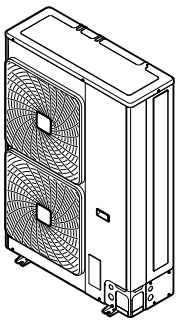

LRMEQ3BY1
LRMEQ4BY1

LRLEQ3BY1
LRLEQ4BY1

Installation and operation manual
Air-cooled refrigeration condensing unit

English

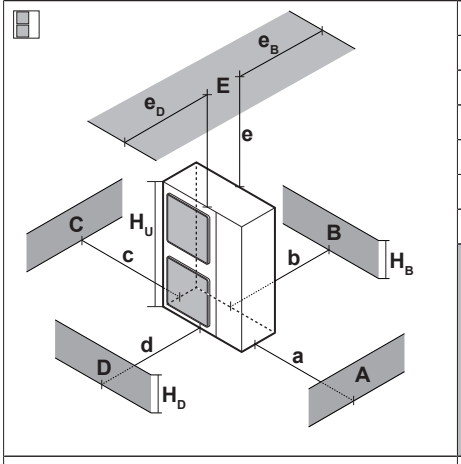

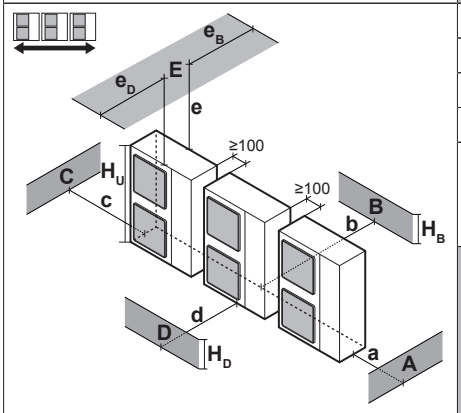

A~E	H_B H_D H_U		(mm) a	b	c	d	e	e_B	e_D	
B	—			≥100						
A, B, C	—		≥100	≥100	≥100					
B, E	—			≥100			≥1000		≤500	
A, B, C, E	—		≥150	≥150	≥150		≥1000		≤500	
D	—					≥500				
D, E	—					≥1000	≥1000	≤500		
B, D	—			≥100		≥500				
B, D, E	$H_B<H_D$	$H_B≤½H_U$		≥250		≥750	≥1000	≤500		1
		$½H_U<H_B≤H_U$		≥250		≥1000	≥1000	≤500		
		$H_B>H_U$	⊘							
	$H_B>H_D$	$H_D≤½H_U$		≥100		≥1000	≥1000		≤500	
		$½H_U<H_D≤H_U$		≥200		≥1000	≥1000		≤500	
		$H_D>H_U$		≥200		≥1700	≥1000		≤500	
A, B, C	—		≥200	≥300	≥1000					
A, B, C, E	—		≥200	≥300	≥1000		≥1000		≤500	
D	—					≥1000				
D, E	—					≥1000	≥1000	≤500		
B, D	$H_D>H_U$			≥300		≥1000				
	$H_D≤½H_U$			≥250		≥1500				
	$½H_U<H_D≤H_U$			≥300		≥1500				
B, D, E	$H_B<H_D$	$H_B≤½H_U$		≥300		≥1000	≥1000	≤500		1+2
		$½H_U<H_B≤H_U$		≥300		≥1250	≥1000	≤500		
		$H_B>H_U$	⊘							
	$H_B>H_D$	$H_D≤½H_U$		≥250		≥1500	≥1000		≤500	
		$½H_U<H_D≤H_U$		≥300		≥1500	≥1000		≤500	
		$H_D>H_U$		≥300		≥2200	≥1000		≤500	

1

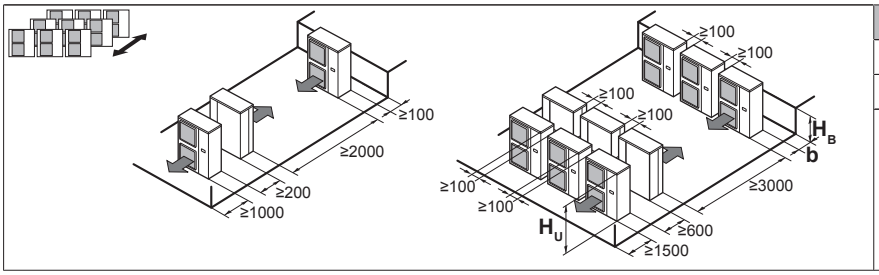

H_B H_U	b (mm)
$H_B≤½H_U$	b≥250
$½H_U<H_B≤H_U$	b≥300
$H_B>H_U$	⊘

2

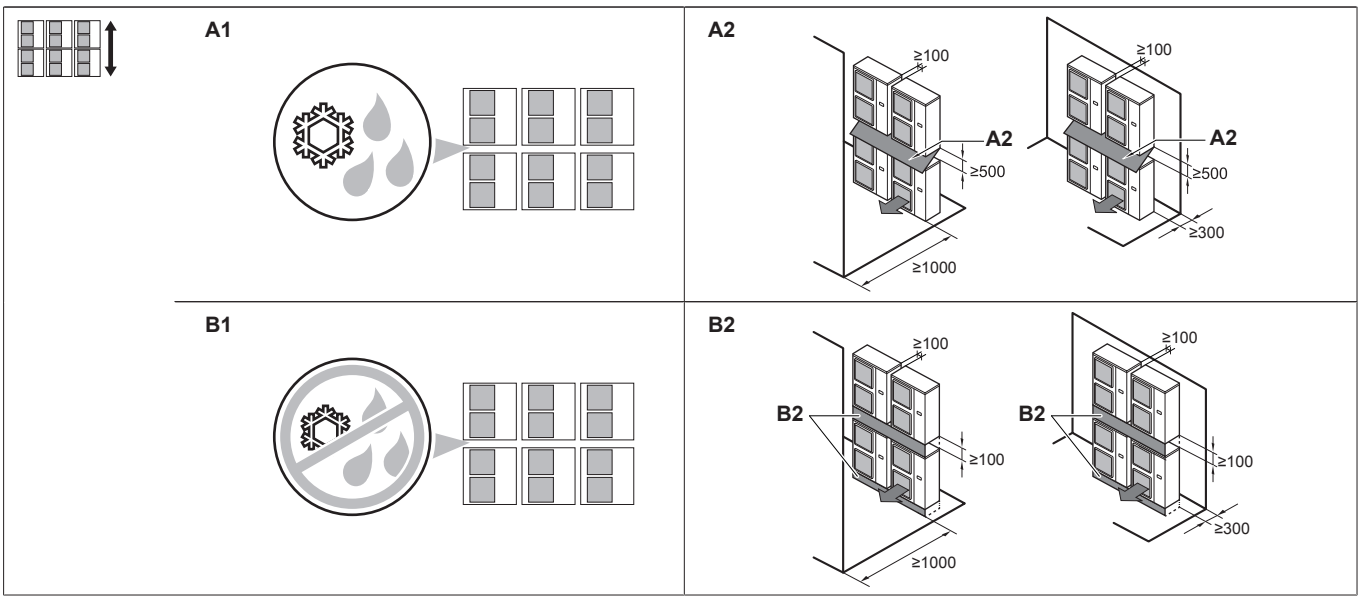

3

CE - DECLARATION-OF-CONFORMITY
CE - KONFORMITÄTSERKLÄRUNG
CE - DECLARATION-DE-CONFORMITE
CE - CONFORMITEITSVERKLARING
CE - DECLARACION-DE-CONFORMIDAD
CE - DICHIARAZIONE-DI-CONFORMITA
CE - ΔΗΛΩΣΗ ΣΥΜΜΟΡΦΩΣΗΣ
CE - DECLARAÇÃO-DE-CONFORMIDADE
CE - ЗАЯВЛЕНИЕ-О-СООТВЕТСТВИИ
CE - OVERENSSTEMMELSESERKLÆRING
CE - FÖRSÄKRAN-OM-ÖVERENSTÄMMELSE
CE - ERKLÆRING OM-SAMSVAR
CE - ILMOITUS-YHDENMUKAISUUDESTA
CE - PROHLÁŠENÍ-O-SHODĚ
CE - IZJAVA-O-USKLAĐENOSTI
CE - MEGFELELŐSÉGI-NYILATKOZAT
CE - DEKLARACJA-ZGODNOŚCI
CE - DECLARAŢIE-DE-CONFORMITATE
CE - IZJAVA O SKLADNOSTI
CE - VASTAVUSDEKLARATSIOON
CE - ДЕКЛАРАЦИЯ-ЗА-СЪОТВЕТСТВИЕ
CE - ATITIKTIES-DEKLARACIJA
CE - ATBILSTÍBAS-DEKLARĀCIJA
CE - VYHLÁSENIE-ZHODY
CE - UYGUNLUK-BEYANI

Daikin Europe N.V.

01 (GB) declares under its sole responsibility that the air conditioning models to which this declaration relates:
02 (D) erklärt auf seine alleinige Verantwortung daß die Modelle der Klimageräte für die diese Erklärung bestimmt ist:
03 (F) déclare sous sa seule responsabilité que les appareils d'air conditionné visés par la présente déclaration:
04 (NL) verklaart hierbij op eigen exclusieve verantwoordelijkheid dat de airconditioning units waarop deze verklaring betrekking heeft:
05 (E) declara baja su única responsabilidad que los modelos de aire acondicionado a los cuales hace referencia la declaración:
06 (I) dichiara sotto sua responsabilità che i condizionatori modello a cui è riferita questa dichiarazione:
07 (GR) δηλώνει με αποκλειστική της ευθύνη ότι τα μοντέλα των κλιματιστικών συσκευών στα οποία αναφέρεται η παρούσα δήλωση:
08 (P) declara sob sua exclusiva responsabilidade que os modelos de ar condicionado a que esta declaração se refere:
09 (RUS) заявляет, исключительно под свою ответственность, что модели кондиционеров воздуха, к которым относится настоящее заявление:
10 (DK) erklærer under eneansvar, at klimaanlægmodellerne, som denne deklaration vedrører:
11 (S) deklarerar i egenskap av huvudansvarig, att luftkonditioneringsmodellerna som berörs av denna deklaration innebär att:
12 (N) erklærer et fullstendig ansvar for at de luftkondisjoneringsmodeller som berøres av denne deklarasjon, innebærer at:
13 (FIN) ilmoittaa yksinomaan omalla vastuullaan, että tämän ilmoituksen tarkoittamat ilmastointilaitteiden mallit:
14 (CZ) prohlašuje ve své plné odpovědnosti, že modely klimatizace, k nimž se toto prohlášení vztahuje:
15 (HR) izjavljuje pod isključivo vlastitom odgovornošću da su modeli klima uređaja na koje se ova izjava odnosi:
16 (H) teljes felelőssége tudatában kijelenti, hogy a klímaberendezés modellek, melyekre e nyilatkozat vonatkozik:
17 (PL) deklaruje na własną i wyłączną odpowiedzialność, że modele klimatyzatorów, których dotyczy niniejsza deklaracja:
18 (RO) declară pe proprie răspundere că aparatele de aer condiţionat la care se referă această declaraţie:
19 (SLO) z vso odgovornostjo izjavlja, da so modeli klimatskih naprav, na katere se izjava nanaša:
20 (EST) kinnitab oma täielikul vastutusel, et käesoleva deklaratsiooni alla kuuluvad kliimaseadmete mudelid:
21 (BG) декларира на своя отговорност, че моделите климатична инсталация, за които се отнася тази декларация:
22 (LT) visiška savo atsakomybe skelbia, kad oro kondicionavimo prietaisų modeliai, kuriems yra taikoma ši deklaracija:
23 (LV) ar pilnu atbildību apliecina, ka tālāk uzskaitīto modeļu gaisa kondicionētāji, uz kuriem attiecas šī deklarācija:
24 (SK) vyhlasuje na vlastnú zodpovednosť, že tieto klimatizačné modely, na ktoré sa vzťahuje toto vyhlásenie:
25 (TR) tamamen kendi sorumluluğunda olmak üzere bu bildirinin ilgili olduğu klima modellerinin aşağıdaki gibi olduğunu beyan eder:

LRMEQ3BY1*,
LRMEQ4BY1*,

* = , , 1, 2, 3, ..., 9

01 are in conformity with the following standard(s) or other normative document(s), provided that these are used in accordance with our instructions:
02 der/den folgenden Norm(en) oder einem anderen Normdokument oder - dokumenten entspricht/entsprechen, unter der Voraussetzung, daß sie gemäß unseren Anweisungen eingesetzt werden:
03 sont conformes à la/aux norme(s) ou autre(s) document(s) normatif(s), pour autant qu'ils soient utilisés conformément à nos instructions:
04 conform de volgende norm(en) of één of meer andere bindende documenten zijn, op voorwaarde dat ze worden gebruikt overeenkomstig onze instructies:
05 están en conformidad con la(s) siguiente(s) norma(s) u otro(s) documento(s) normativo(s), siempre que sean utilizados de acuerdo con nuestras instrucciones:
06 sono conformi al(i) seguente(i) standard(s) o altro(i) documento(i) a carattere normativo, a patto che vengano usati in conformità alle nostre istruzioni:
07 είναι σύμφωνα με το(α) ακόλουθο(α) πρότυπο(α) ή άλλο έγγραφο(α) κανονισμών, υπό την προϋπόθεση ότι χρησιμοποιούνται σύμφωνα με τις οδηγίες μας:
08 estão em conformidade com a(s) seguinte(s) norma(s) ou outro(s) documento(s) normativo(s), desde que estes sejam utilizados de acordo com as nossas instruções:
09 соответствуют следующим стандартам или другим нормативным документам, при условии их использования согласно нашим инструкциям:
10 overholder følgende standard(er) eller andet/andre retningsgivende dokument(er), forudsat at disse anvendes i henhold til vore instrukser:
11 respektive utrustning är utförd i överensstämmelse med och följer följande standard(er) eller andra normgivande dokument, under förutsättning att användning sker i överensstämmelse med våra instruktioner:
12 respektive utstyr er i overensstemmelse med følgende standard(er) eller andre normgivende dokument(er), under forutsetning av at disse brukes i henhold til våre instrukser:
13 vastaavat seuraavien standardien ja muiden ohjeellisten dokumenttien vaatimuksia edellyttäen, että niitä käytetään ohjeidemme mukaisesti:
14 za předpokladu, že jsou využívány v souladu s našimi pokyny, odpovídají následujícím normám nebo normativním dokumentům:
15 u skladu sa slijedećim standardom(ima) ili drugim normativnim dokumentom(ima), uz uvjet da se oni koriste u skladu s našim uputama:
16 megfelelnek az alábbi szabvány(ok)nak vagy egyéb irányadó dokumentum(ok)nak, ha azokat előírás szerint használják:
17 spełniają wymogi następujących norm i innych dokumentów normalizacyjnych, pod warunkiem że używane są zgodnie z naszymi instrukcjami:
18 sunt în conformitate cu următorul (următoarele) standard(e) sau alt(e) document(e) normativ(e), cu condiţia ca acestea să fie utilizate în conformitate cu instrucţiunile noastre:
19 skladni z naslednjimi standardi in drugimi normativi, pod pogojem, da se uporabljajo v skladu z našimi navodili:
20 on vastavuses järgmis(t)e standardi(te)ga või teiste normatiivsete dokumentidega, kui neid kasutatakse vastavalt meie juhenditele:
21 съответстват на следните стандарти или други нормативни документи, при условие, че се използват съгласно нашите инструкции:
22 atitinka žemiau nurodytus standartus ir (arba) kitus norminius dokumentus su sąlyga, kad yra naudojami pagal mūsų nurodymus:
23 tad, ja lietoti atbilstoši ražotāja norādījumiem, atbilst sekojošiem standartiem un citiem normatīviem dokumentiem:
24 sú v zhode s nasledovnou(ými) normou(ami) alebo iným(i) normatívnym(i) dokumentom(ami), za predpokladu, že sa používajú v súlade s našim návodom:
25 ürünün, talimatlarımıza göre kullanılması koşuluyla aşağıdaki standartlar ve norm belirten belgelerle uyumludur:

EN60335-2-40,

01 following the provisions of:
02 gemäß den Vorschriften der:
03 conformément aux stipulations des:
04 overeenkomstig de bepalingen van:
05 siguiendo las disposiciones de:
06 secondo le prescrizioni per:
07 με τήρηση των διατάξεων των:
08 de acordo com o previsto em:
09 в соответствии с положениями:
10 under iagttagelse af bestemmelserne i:
11 enligt villkoren i:
12 gitt i henhold til bestemmelsene i:
13 noudattaen määräyksiä:
14 za dodržení ustanovení předpisu:
15 prema odredbama:
16 követi a(z):
17 zgodnie z postanowieniami Dyrektyw:
18 în urma prevederilor:
19 ob upoštevanju določb:
20 vastavalt nõuetele:
21 спедвайки клаузите на:
22 laikantis nuostatų, pateikiamų:
23 ievērojot prasības, kas noteiktas:
24 održiavajúc ustanovenia:
25 bunun koşullarına uygun olarak:

Machinery 2006/42/EC	***
Electromagnetic Compatibility 2014/30/EU	*
Pressure Equipment 2014/68/EU	**

01 Directives, as amended.
02 Direktiven, gemäß Änderung.
03 Directives, telles que modifiées.
04 Richtlijnen, zoals geamendeerd.
05 Directivas, según lo enmendado.
06 Direttive, come da modifica.
07 Οδηγιών, όπως έχουν τροποποιηθεί.
08 Directivas, conforme alteração em.
09 Директив со всеми поправками.
10 Direktiver, med senere ændringer.
11 Direktiv, med företagna ändringar.
12 Direktiver, med foretatte endringer.
13 Direktiivejä, sellaisina kuin ne ovat muutettuina.
14 v platném znění.
15 Smjernice, kako je izmijenjeno.
16 irányelv(ek) és módosításaik rendelkezéseit.
17 z późniejszymi poprawkami.
18 Directivelor, cu amendamentele respective.
19 Direktive z vsemi spremembami.
20 Direktiivid koos muudatustega.
21 Директиви, с техните изменения.
22 Direktyvose su papildymais.
23 Direktīvās un to papildinājumos.
24 Smernice, v platnom znení.
25 Değiştirilmiş hallerıyle Yönetmelikler.

01 * as set out in **<A>** and judged positively by **<B>** according to the **Certificate <C>**.
** as set out in the Technical Construction File **<D>** and judged positively by **<E>** (Applied module **<F>**). **<G>**. Risk category **<H>**. Also refer to next page.
02 * wie in **<A>** aufgeführt und von **<B>** positiv beurteilt gemäß **Zertifikat <C>**.
** wie in der Technischen Konstruktionsakte **<D>** aufgeführt und von **<E>** (Angewandtes Modul **<F>**) positiv ausgezeichnet. **<G>**. Risikoart **<H>**. Siehe auch nächste Seite.
03 * tel que défini dans **<A>** et évalué positivement par **<B>** conformément au **Certificat <C>**.
** tel que stipulé dans le Fichier de Construction Technique **<D>** et jugé positivement par **<E>** (Module appliqué **<F>**). **<G>**. Catégorie de risque **<H>**. Se reporter également à la page suivante.
04 * zoals vermeld in **<A>** en positief beoordeeld door **<B>** overeenkomstig **Certificaat <C>**.
** zoals vermeld in het Technisch Constructiedossier **<D>** en in orde bevonden door **<E>** (Toegepaste module **<F>**). **<G>**. Risicocategorie **<H>**. Zie ook de volgende pagina.
05 * como se establece en **<A>** y es valorado positivamente por **<B>** de acuerdo con el **Certificado <C>**.
** tal como se expone en el Archivo de Construcción Técnica **<D>** y juzgado positivamento por **<E>** (Modulo aplicado **<F>**). **<G>**. Categoría de riesgo **<H>**. Consulte también la siguiente página.
06 * delineato nel **<A>** e giudicato positivamente da **<B>** secondo il **Certificato <C>**.
** delineato nel File Tecnico di Costruzione **<D>** e giudicato positivamente da **<E>** (Modulo **<F>** applicato). **<G>**. Categoria di rischio **<H>**. Fare riferimento anche alla pagina successiva.
07 * όπως καθορίζεται στο **<A>** και κρίνεται θετικά από το **<B>** σύμφωνα με το **Πιστοποιητικό <C>**.
** όπως προσδιορίζεται στο Αρχείο Τεχνικής Κατασκευής **<D>** και κρίνεται θετικά από το **<E>** (Χρησιμοποιούμενη υπομονάδα **<F>**). **<G>**. Κατηγορία επικινδυνότητας **<H>**. Ανατρέξτε επίσης στην επόμενη σελίδα.
08 * tal como estabelecido em **<A>** e com o parecer positivo de **<B>** de acordo com o **Certificado <C>**.
** tal como estabelecido no Ficheiro Técnico de Construção **<D>** e com o parecer positivo de **<E>** (Módulo aplicado **<F>**). **<G>**. Categoria de risco **<H>**. Consultar também a página seguinte.
09 * как указано в **<A>** и в соответствии с положительным решением **<B>** согласно **Свидетельству <C>**.
** как указано в Досье технического топкования **<D>** и в соответствии с положительным решением **<E>** (Прикладной модуль **<F>**). **<G>**. Категория риска **<H>**. Также смотрите следующую страницу.
10 * som anført i **<A>** og positivt vurderet af **<B>** i henhold til **Certifikat <C>**.
** som anført i den Tekniske Konstruktionsfil **<D>** og positivt vurderet af **<E>** (Anvendt modul **<F>**). **<G>**. Risikoklasse **<H>**. Se også næste side.
11 * enligt **<A>** och godkänts av **<B>** enligt **Certifikatet <C>**.
** i enlighet med den Tekniska Konstruktionsfilen **<D>** som positivt intygats av **<E>** (Fastsatt modul **<F>**). **<G>**. Riskkategori **<H>**. Se även nästa sida.
12 * som det fremkommer i **<A>** og gjennom positiv bedømmelse av **<B>** ifølge **Sertifikat <C>**.
** som det fremkommer i den Tekniske Konstruksjonsfilen **<D>** og gjennom positiv bedømmelse av **<E>** (Anvendt modul **<F>**). **<G>**. Risikokategori **<H>**. Se også neste side.
13 * jotka on esitetty asiakirjassa **<A>** ja jotka **<B>** on hyväksynyt **Sertifikaatin <C>** mukaisesti.
** jotka on esitetty Teknisessä Asiakirjassa **<D>** ja jotka **<E>** on hyväksynyt (Sovellettu moduli **<F>**). **<G>**. Vaaraluokka **<H>**. Katso myös seuraava sivu.
14 * jak bylo uvedeno v **<A>** a pozitivně zjištěno **<B>** v souladu s **osvědčením <C>**.
** jak bylo uvedeno v souboru technické konstrukce **<D>** a pozitivně zjištěno **<E>** (použitý modul **<F>**). **<G>**. Kategorie rizik **<H>**. Viz také následující strana.
15 * kako je izloženo u **<A>** i pozitivno ocijenjeno od strane **<B>** prema **Certifikatu <C>**.
** kako je izloženo u Datoteci o tehničkoj konstrukciji **<D>** i pozitivno ocijenjeno od strane **<E>** (Primijenjen modul **<F>**). **<G>**. Kategorija opasnosti **<H>**. Također pogledajte na slijedećoj stranici.
16 * a(z) **<A>** alapján, a(z) **<B>** igazolta a megfelelést, a(z) **<C>** **tanúsítvány** szerint.
** a(z) **<D>** műszaki konstrukciós dokumentáció alapján, a(z) **<E>** igazolta a megfelelést (alkalmazott modul: **<F>**). **<G>**. Veszélyességi kategória **<H>**. Lásd még a következő oldalon.
17 * zgodnie z dokumentacją **<A>**, pozytywną opinią **<B>** i **Świadectwem <C>**.
** zgodnie z archiwalną dokumentacją konstrukcyjną **<D>** i pozytywną opinią **<E>** (Zastosowany modul **<F>**). **<G>**. Kategoria zagrożenia **<H>**. Patrz także następna strona.
18 * aşa cum este stabilit în **<A>** şi apreciat pozitiv de **<B>** în conformitate cu **Certificatul <C>**.
** conform celor stabilite în Dosarul tehnic de construcţie **<D>** şi apreciate pozitiv de **<E>** (Modul aplicat **<F>**). **<G>**. Categorie de risc **<H>**. Consultaţi de asemenea pagina următoare.
19 * kot je določeno v **<A>** in odobreno s strani **<B>** v skladu s **certifikatom <C>**.
** kot je določeno v tehnični mapi **<D>** in odobreno s strani **<E>** (Uporabljen modul **<F>**). **<G>**. Kategorija tveganja **<H>**. Glejte tudi na naslednji strani.
20 * nagu on näidatud dokumendis **<A>** ja heaks kiidetud **<B>** järgi vastavalt **sertifikaadile <C>**.
** nagu on näidatud tehnilises dokumentatsioonis **<D>** ja heaks kiidetud **<E>** järgi (lisamoodul **<F>**). **<G>**. Riskikategooria **<H>**. Vaadake ka järgmist lehekülge.
21 * както е изложено в **<A>** и оценено положително от **<B>** съгласно **Сертификата <C>**.
** както е заложено в Акта за техническа конструкция **<D>** и оценено положително от **<E>** (Приложен модул **<F>**). **<G>**. Категория риск **<H>**. Вижте също на следващата страница.
22 * kaip nustatyta **<A>** ir kaip teigiamai nuspręsta **<B>** pagal **Sertifikatą <C>**.
** kaip nurodyta Techninėje konstrukcijos byloje **<D>** ir patvirtinta **<E>** (taikomas modulis **<F>**). **<G>**. Rizikos kategorija **<H>**. Taip pat žiūrėkite ir kitą puslapį.
23 * kā norādīts **<A>** un atbilstoši **<B>** pozitīvajam vērtējumam saskaņā ar **sertifikātu <C>**.
** kā noteikts tehniskajā dokumentācijā **<D>**, atbilstoši **<E>** pozitīvajam lēmumam (piekritīgā sadaļa: **<F>**). **<G>**. Riska kategorija **<H>**. Skat. arī nākošo lappusi.
24 * ako bolo uvedené v **<A>** a pozitívne zistené **<B>** v súlade s **osvedčením <C>**.
** ako je to stanovené v Súbore technickej konštrukcie **<D>** a kladne posúdené **<E>** (Aplikovaný modul **<F>**). **<G>**. Kategória nebezpečia **<H>**. Viď tiež nasledovnú stranu.
25 * **<A>**'da belirtildiği gibi ve **<C>** **Sertifikasına** göre **<B>** tarafından olumlu olarak değerlendirildiği gibi.
** **<D>** Teknik Yapı Dosyasında belirtildiği gibi ve **<E>** tarafından olumlu olarak (Uygulanan modül **<F>**) değerlendirilmiştir. **<G>**. Risk kategorisi **<H>**. Ayrıca bir sonraki sayfaya bakın.

<A>	**DAIKIN.TCF.023.D1/06-2017**
<B>	**TÜV (NB1856)**
<C>	**0502240101**
<D>	**Daikin.TCFP.001**
<E>	**VINÇOTTE nv (NB0026)**
<F>	**D1**
<G>	**—**
<H>	II

01*** Daikin Europe N.V. is authorised to compile the Technical Construction File.
02*** Daikin Europe N.V. hat die Berechtigung die Technische Konstruktionsakte zusammenzustellen.
03*** Daikin Europe N.V. est autorisé à compiler le Dossier de Construction Technique.
04*** Daikin Europe N.V. is bevoegd om het Technisch Constructiedossier samen te stellen.
05*** Daikin Europe N.V. está autorizado a compilar el Archivo de Construcción Técnica.
06*** Daikin Europe N.V. è autorizzata a redigere il File Tecnico di Costruzione.
07*** Η Daikin Europe N.V. είναι εξουσιοδοτημένη να συντάξει τον Τεχνικό φάκελο κατασκευής.
08*** A Daikin Europe N.V. está autorizada a compilar a documentação técnica de fabrico.
09*** Компания Daikin Europe N.V. уполномочена составить Комплект технической документации.
10*** Daikin Europe N.V. er autoriseret til at udarbejde de tekniske konstruktionsdata.
11*** Daikin Europe N.V. är bemyndigade att sammanställa den tekniska konstruktionsfilen.
12*** Daikin Europe N.V. har tillatelse til å kompilere den Tekniske konstruksjonsfilen.
13*** Daikin Europe N.V. on valtuutettu laatimaan Teknisen asiakirjan.
14*** Společnost Daikin Europe N.V. má oprávnění ke kompilaci souboru technické konstrukce.
15*** Daikin Europe N.V. je ovlašten za izradu Datoteke o tehničkoj konstrukciji.
16*** A Daikin Europe N.V. jogosult a műszaki konstrukciós dokumentáció összeállítására.
17*** Daikin Europe N.V. ma upoważnienie do zbierania i opracowywania dokumentacji konstrukcyjnej.
18*** Daikin Europe N.V. este autorizat să compileze Dosarul tehnic de construcţie.
19*** Daikin Europe N.V. je pooblaščen za sestavo datoteke s tehnično mapo.
20*** Daikin Europe N.V. on volitatud koostama tehnilist dokumentatsiooni.
21*** Daikin Europe N.V. е оторизирана да състави Акта за техническа конструкция.
22*** Daikin Europe N.V. yra įgaliota sudaryti šį techninės konstrukcijos failą.
23*** Daikin Europe N.V. ir autorizēts sastādīt tehnisko dokumentāciju.
24*** Spoločnosť Daikin Europe N.V. je oprávnená vytvoriť súbor technickej konštrukcie.
25*** Daikin Europe N.V. Teknik Yapı Dosyasını derlemeye yetkilidir.

2P452548-2B

CE - DECLARATION-OF-CONFORMITY
CE - KONFORMITÄTSERKLÄRUNG
CE - DECLARATION-DE-CONFORMITE
CE - CONFORMITEITSVERKLARING

CE - DECLARACION-DE-CONFORMIDAD
CE - DICHIARAZIONE-DI-CONFORMITA
CE - ΔΗΛΩΣΗ ΣΥΜΜΟΡΦΩΣΗΣ

CE - DECLARAÇÃO-DE-CONFORMIDADE
CE - ЗАЯВЛЕНИЕ-О-СООТВЕТСТВИИ
CE - OVERENSSTEMMELSESERKLÆRING
CE - FÖRSÄKRAN-OM-ÖVERENSTÄMMELSE

CE - ERKLÆRING OM-SAMSVAR
CE - ILMOITUS-YHDENMUKAISUUDESTA
CE - PROHLÁŠENÍ-O-SHODĚ

CE - IZJAVA-O-USKLAĐENOSTI
CE - MEGFELELŐSÉGI-NYILATKOZAT
CE - DEKLARACJA-ZGODNOŚCI
CE - DECLARAŢIE-DE-CONFORMITATE

CE - IZJAVA O SKLADNOSTI
CE - VASTAVUSDEKLARATSIOON
CE - ДЕКЛАРАЦИЯ-ЗА-СЪОТВЕТСТВИЕ

CE - ATITIKTIES-DEKLARACIJA
CE - ATBILSTĪBAS-DEKLARĀCIJA
CE - VYHLÁSENIE-ZHODY
CE - UYGUNLUK-BEYANI

01 (GB) continuation of previous page:
02 (D) Fortsetzung der vorherigen Seite:
03 (F) suite de la page précédente:
04 (NL) vervolg van vorige pagina:
05 (E) continuación de la página anterior:
06 (I) continua dalla pagina precedente:
07 (GR) συνέχεια από την προηγούμενη σελίδα:
08 (P) continuação da página anterior:
09 (RUS) продолжение предыдущей страницы:
10 (DK) fortsat fra forrige side:
11 (S) fortsättning från föregående sida:
12 (N) fortsettelse fra forrige side:
13 (FIN) jatkoa edelliseltä sivulta:
14 (CZ) pokračování z předchozí strany:
15 (HR) nastavak s prethodne stranice:
16 (H) folytatás az előző oldalról:
17 (PL) ciąg dalszy z poprzedniej strony:
18 (RO) continuarea paginii anterioare:
19 (SLO) nadaljevanje s prejšnje strani:
20 (EST) eelmise leheküljе järg:
21 (BG) продължение от предходната страница:
22 (LT) ankstesnio puslapio tęsinys:
23 (LV) iepriekšējās lappuses turpinājums:
24 (SK) pokračovanie z predchádzajúcej strany:
25 (TR) önceki sayfadan devam:

01 Design Specifications of the models to which this declaration relates:
02 Konstruktionsdaten der Modelle auf die sich diese Erklärung bezieht:
03 Spécifications de conception des modèles auxquels se rapporte cette déclaration:
04 Ontwerpspecificaties van de modellen waarop deze verklaring betrekking heeft:
05 Especificaciones de diseño de los modelos a los cuales hace referencia esta declaración:
06 Specifiche di progetto dei modelli cui fa riferimento la presente dichiarazione:
07 Προδιαγραφές Σχεδιασμού των μοντέλων με τα οποία σχετίζεται η δήλωση:
08 Especificações de projecto dos modelos a que se aplica esta declaração:
09 Проектные характеристики моделей, к которым относится настоящее заявление:
10 Typespecifikationer for de modeller, som denne erklæring vedrører:
11 Designspecifikationer för de modeller som denna deklaration gäller:
12 Konstruksjonsspesifikasjoner for de modeller som berøres av denne deklarasjonen:
13 Tätä ilmoitusta koskevien mallien rakennemäärittely:
14 Specifikace designu modelů, ke kterým se vztahuje toto prohlášení:
15 Specifikacije dizajna za modele na koje se ova izjava odnosi:
16 A jelen nyilatkozat tárgyát képező modellek tervezési jellemzői:
17 Specyfikacje konstrukcyjne modeli, których dotyczy deklaracja:
18 Specificaţiile de proiectare ale modelelor la care se referă această declaraţie:
19 Specifikacije tehničnega načrta za modele, na katere se nanaša ta deklaracija:
20 Deklaratsiooni alla kuuluvate mudelite disainispetsifikatsioonid:
21 Проектни спецификации на моделите, за които се отнася декларацията:
22 Konstrukcinės specifikacijos modelių, kurie susiję su šia deklaracija:
23 To modeļu dizaina specifikācijas, uz kurām attiecas šī deklarācija:
24 Konštrukčné špecifikácie modelu, ktorého sa týka toto vyhlásenie:
25 Bu bildirinin ilgili olduğu modellerin Tasarım Özellikleri:

01 · Maximum allowable pressure (PS): **<K>** (bar)
· Minimum/maximum allowable temperature (TS*):
* TSmin: Minimum temperature at low pressure side: **<L>** (°C)
* TSmax: Saturated temperature corresponding with the maximum allowable pressure (PS): **<M>** (°C)
· Refrigerant: **<N>**
· Setting of pressure safety device: **<P>** (bar)
· Manufacturing number and manufacturing year: refer to model nameplate

02 · Maximal zulässiger Druck (PS): **<K>** (Bar)
· Minimal/maximal zulässige Temperatur (TS*):
* TSmin: Mindesttemperatur auf der Niederdruckseite: **<L>** (°C)
* TSmax: Sättigungstemperatur die dem maximal zulässigen Druck (PS) entspricht: **<M>** (°C)
· Kältemittel: **<N>**
· Einstellung der Druck-Schutzvorrichtung: **<P>** (Bar)
· Herstellungsnummer und Herstellungsjahr: siehe Typenschild des Modells

03 · Pression maximale admise (PS): **<K>** (bar)
· Température minimum/maximum admise (TS*):
* TSmin: température minimum côté basse pression: **<L>** (°C)
* TSmax: température saturée correspondant à la pression maximale admise (PS): **<M>** (°C)
· Réfrigérant: **<N>**
· Réglage du dispositif de sécurité de pression: **<P>** (bar)
· Numéro de fabrication et année de fabrication: se reporter à la plaquette signalétique du modèle

04 · Maximaal toelaatbare druk (PS): **<K>** (bar)
· Minimaal/maximaal toelaatbare temperatuur (TS*):
* TSmin: Minimumtemperatuur aan lagedrukzijde: **<L>** (°C)
* TSmax: Verzadigde temperatuur die overeenstemt met de maximaal toelaatbare druk (PS): **<M>** (°C)
· Koelmiddel: **<N>**
· Instelling van drukbeveiliging: **<P>** (bar)
· Fabricagenummer en fabricagejaar: zie naamplaat model

05 · Presión máxima admisible (PS): **<K>** (bar)
· Temperatura mínima/máxima admisible (TS*):
* TSmin: Temperatura mínima en el lado de baja presión: **<L>** (°C)
* TSmax: Temperatura saturada correspondiente a la presión máxima admisible (PS): **<M>** (°C)
· Refrigerante: **<N>**
· Ajuste del presostato de seguridad: **<P>** (bar)
· Número de fabricación y año de fabricación: consulte la placa de especificaciones técnicas del modelo

06 · Pressione massima consentita (PS): **<K>** (bar)
· Temperatura minima/massima consentita (TS*):
* TSmin: temperatura minima nel lato di bassa pressione: **<L>** (°C)
* TSmax: temperatura satura corrispondente alla pressione massima consentita (PS): **<M>** (°C)
· Refrigerante: **<N>**
· Impostazione del dispositivo di controllo della pressione: **<P>** (bar)
· Numero di serie e anno di produzione: fare riferimento alla targhetta del modello

07 · Μέγιστη επιτρεπόμενη πίεση (PS): **<K>** (bar)
· Ελάχιστη/μέγιστη επιτρεπόμενη θερμοκρασία (TS*):
* TSmin: Ελάχιστη θερμοκρασία για την πλευρά χαμηλής πίεσης: **<L>** (°C)
* TSmax: Κορεσμένη θερμοκρασία που αντιστοιχεί με τη μέγιστη επιτρεπόμενη πίεση (PS): **<M>** (°C)
· Ψυκτικό: **<N>**
· Ρύθμιση της διάταξης ασφάλειας πίεσης: **<P>** (bar)
· Αριθμός κατασκευής και έτος κατασκευής: ανατρέξτε στην πινακίδα αναγνώρισης του μοντέλου

08 · Pressão máxima permitida (PS): **<K>** (bar)
· Temperaturas mínima e máxima permitidas (TS*):
* TSmin: Temperatura mínima em baixa pressão: **<L>** (°C)
* TSmax: Temperatura de saturação correspondente à pressão máxima permitida (PS): **<M>** (°C)
· Refrigerante: **<N>**
· Regulação do dispositivo de segurança da pressão: **<P>** (bar)
· Número e ano de fabrico: consultar a placa de especificações da unidade

09 · Максимально допустимое давление (PS): **<K>** (бар)
· Минимально/Максимально допустимая температура (TS*):
* TSmin: Минимальная температура на стороне низкого давления: **<L>** (°C)
* TSmax: Температура кипения, соответствующая максимально допустимому давлению (PS): **<M>** (°C)
· Хладагент: **<N>**
· Настройка устройства защиты по давлению: **<P>** (бар)
· Заводской номер и год изготовления: смотрите паспортную табличку модели

10 · Maks. tilladt tryk (PS): **<K>** (bar)
· Min./maks. tilladte temperatur (TS*):
* TSmin: Min. temperatur på lavtrykssiden: **<L>** (°C)
* TSmax: Mættet temperatur svarende til maks. tilladte tryk (PS): **<M>** (°C)
· Kølemiddel: **<N>**
· Indstilling af tryksikringsudstyr: **<P>** (bar)
· Produktionsnummer og fremstillingsår: se modellens fabrikksskilt

11 · Maximalt tillåtet tryck (PS): **<K>** (bar)
· Min/max tillåten temperatur (TS*):
* TSmin: Minimumtemperatur på lågtryckssidan: **<L>** (°C)
* TSmax: Mättnadstemperatur som motsvarar maximalt tillåtet tryck (PS): **<M>** (°C)
· Köldmedel: **<N>**
· Inställning för trycksäkerhetsenhet: **<P>** (bar)
· Tillverkningsnummer och tillverkningsår: se modellens namnplåt

12 · Maksimalt tillatt trykk (PS): **<K>** (bar)
· Minimalt/maksimalt tillatt temperatur (TS*):
* TSmin: Minimumstemperatur på lavtrykkssiden: **<L>** (°C)
* TSmax: Metningstemperatur i samsvar med maksimalt tillatt trykk (PS): **<M>** (°C)
· Kjølemedium: **<N>**
· Innstilling av sikkerhetsanordning for trykk: **<P>** (bar)
· Produksjonsnummer og produksjonsår: se modellens merkeplate

13 · Suurin sallittu paine (PS): **<K>** (bar)
· Pienin/suurin sallittu lämpötila (TS*):
* TSmin: Alhaisin matalapainepuolen lämpötila: **<L>** (°C)
* TSmax: Suurinta sallittua painetta (PS) vastaava kyllästyslämpötila: **<M>** (°C)
· Kylmäaine: **<N>**
· Varmuuspainelaitteen asetus: **<P>** (bar)
· Valmistusnumero ja valmistusvuosi: katso mallin nimikilpi

14 · Maximální přípustný tlak (PS): **<K>** (bar)
· Minimální/maximální přípustná teplota (TS*):
* TSmin: Minimální teplota na nízkotlaké straně: **<L>** (°C)
* TSmax: Saturovaná teplota odpovídající maximálnímu přípustnému tlaku (PS): **<M>** (°C)
· Chladivo: **<N>**
· Nastavení bezpečnostního tlakového zařízení: **<P>** (bar)
· Výrobní číslo a rok výroby: viz typový štítek modelu

15 · Najveći dopušten tlak (PS): **<K>** (bar)
· Najniža/najviša dopuštena temperatura (TS*):
* TSmin: Najniža temperatura u području niskog tlaka: **<L>** (°C)
* TSmax: Standardna temperatura koja odgovara najvećem dopuštenom tlaku (PS): **<M>** (°C)
· Rashladno sredstvo: **<N>**
· Postavke sigurnosne naprave za tlak: **<P>** (bar)
· Proizvodni broj i godina proizvodnje: pogledajte natpisnu pločicu modela

16 · Legnagyobb megengedhető nyomás (PS): **<K>** (bar)
· Legkisebb/legnagyobb megengedhető hőmérséklet (TS*):
* TSmin: Legkisebb megengedhető hőmérséklet a kis nyomású oldalon: **<L>** (°C)
* TSmax: A legnagyobb megengedhető nyomásnak (PS) megfelelő telítettségi hőmérséklet: **<M>** (°C)
· Hűtőközeg: **<N>**
· A túlnyomás-kapcsoló beállítása: **<P>** (bar)
· Gyártási szám és gyártási év: lásd a berendezés adattábláján

17 · Maksymalne dopuszczalne ciśnienie (PS): **<K>** (bar)
· Minimalna/maksymalna dopuszczalna temperatura (TS*):
* TSmin: Minimalna temperatura po stronie niskociśnieniowej: **<L>** (°C)
* TSmax: Temperatura nasycenia odpowiadająca maksymalnemu dopuszczalnemu ciśnieniu (PS): **<M>** (°C)
· Czynnik chłodniczy: **<N>**
· Nastawa ciśnieniowego urządzenia bezpieczeństwa: **<P>** (bar)
· Numer fabryczny oraz rok produkcji: patrz tabliczka znamionowa modelu

18 · Presiune maximă admisibilă (PS): **<K>** (bar)
· Temperatură minimă/maximă admisibilă (TS*):
* TSmin: Temperatură minimă pe partea de presiune joasă: **<L>** (°C)
* TSmax: Temperatură de saturaţie corespunzând presiunii maxime admisibile (PS): **<M>** (°C)
· Agent frigorific: **<N>**
· Reglarea dispozitivului de siguranţă pentru presiune: **<P>** (bar)
· Numărul de fabricaţie şi anul de fabricaţie: consultaţi placa de identificare a modelului

19 · Maksimalni dovoljeni tlak (PS): **<K>** (bar)
· Minimalna/maksimalna dovoljena temperatura (TS*):
* TSmin: Minimalna temperatura na nizkotlačni strani: **<L>** (°C)
* TSmax: Nasičena temperatura, ki ustreza maksimalnemu dovoljenemu tlaku (PS): **<M>** (°C)
· Hladivo: **<N>**
· Nastavljanje varnostne naprave za tlak: **<P>** (bar)
· Tovarniška številka in leto proizvodnje: glejte napisno ploščico

20 · Maksimaalne lubatud surve (PS): **<K>** (bar)
· Minimaalne/maksimaalne lubatud temperatuur (TS*):
* TSmin: Minimaalne temperatuur madalsurve küljel: **<L>** (°C)
* TSmax: Maksimaalsele lubatud survele (PS) vastav küllastunud temperatuur: **<M>** (°C)
· Jahutusaine: **<N>**
· Surve turvaseadme seadistus: **<P>** (bar)
· Tootmisnumber ja tootmisaasta: vaadake mudeli andmeplaati

21 · Максимално допустимо налягане (PS): **<K>** (bar)
· Минимално/максимално допустима температура (TS*):
* TSmin: Минимална температура от страната на ниското налягане: **<L>** (°C)
* TSmax: Температура на насищане, съответстваща на максимално допустимото налягане (PS): **<M>** (°C)
· Охладител: **<N>**
· Настройка на предпазното устройство за налягане: **<P>** (bar)
· Фабричен номер и година на производство: вижте табелката на модела

22 · Maksimalus leistinas slėgis (PS): **<K>** (bar)
· Minimali/maksimali leistina temperatūra (TS*):
* TSmin: Minimali temperatūra žemo slėgio pusėje: **<L>** (°C)
* TSmax: Prisotinta temperatūra, atitinkamti maksimalų leistiną slėgį (PS): **<M>** (°C)
· Šaldymo skystis: **<N>**
· Apsauginio slėgio prietaiso nustatymas: **<P>** (bar)
· Gaminio numeris ir pagaminimo metai: žiūrėkite modelio pavadinimo plokštelę

23 · Maksimālais pieļaujamais spiediens (PS): **<K>** (bar)
· Minimālā/maksimālā pieļaujamā temperatūra (TS*):
* TSmin: Minimālā temperatūra zemā spiediena pusē: **<L>** (°C)
* TSmax: Piesātinātā temperatūra saskaņā ar maksimālo pieļaujamo spiedienu (PS): **<M>** (°C)
· Dzesinātājs: **<N>**
· Spiediena drošības ierīces iestatīšana: **<P>** (bar)
· Izgatavošanas numurs un izgatavošanas gads: skat. modeļa izgatavotājuzņēmuma pliksnītie

24 · Maximálny povolený tlak (PS): **<K>** (bar)
· Minimálna/maximálna povolená teplota (TS*):
* TSmin: Minimálna teplota na nízkotlakovej strane: **<L>** (°C)
* TSmax: Nasýtená teplota korešpondujúca s maximálnym povoleným tlakom (PS): **<M>** (°C)
· Chladivo: **<N>**
· Nastavenie tlakového poistného zariadenia: **<P>** (bar)
· Výrobné číslo a rok výroby: nájdete na výrobnom štítku modelu

25 · Izin verilen maksimum basınç (PS): **<K>** (bar)
· İzin verilen minimum/maksimum sıcaklık (TS*):
* TSmin: Düşük basınç tarafındaki minimum sıcaklık: **<L>** (°C)
* TSmax: İzin verilen maksimum basınca (PS) karşı gelen doyma sıcaklığı: **<M>** (°C)
· Soğutucu: **<N>**
· Basınç emniyet düzeninin ayarı: **<P>** (bar)
· İmalat numarası ve imalat yılı: modelin ünite plakasına bakın

<K>	PS	**40 bar**
<L>	TSmin	**–20 °C**
<M>	TSmax	**63 °C**
<N>		**R410A**
<P>		**40 bar**

01 Name and address of the Notified body that judged positively on compliance with the Pressure Equipment Directive: **<Q>**
02 Name und Adresse der benannten Stelle, die positiv unter Einhaltung der Druckanlagen-Richtlinie urteilte: **<Q>**
03 Nom et adresse de l'organisme notifié qui a évalué positivement la conformité à la directive sur l'équipement de pression: **<Q>**
04 Naam en adres van de aangemelde instantie die positief geoordeeld heeft over de conformiteit met de Richtlijn Drukapparatuur: **<Q>**
05 Nombre y dirección del Organismo Notificado que juzgó positivamente el cumplimiento con la Directiva en materia de Equipos de Presión: **<Q>**
06 Nome e indirizzo dell'Ente riconosciuto che ha riscontrato la conformità alla Direttiva sulle apparecchiature a pressione: **<Q>**
07 Όνομα και διεύθυνση του Κοινοποιημένου οργανισμού που απεφάνθη θετικά για τη συμμόρφωση προς την Οδηγία Εξοπλισμών υπό Πίεση: **<Q>**
08 Nome e morada do organismo notificado, que avaliou favoravelmente a conformidade com a directiva sobre equipamentos pressurizados: **<Q>**
09 Название и адрес органа технической экспертизы, принявшего положительное решение о соответствии Директиве об оборудовании под давлением: **<Q>**
10 Navn og adresse på bemyndiget organ, der har foretaget en positiv bedømmelse af, at udstyret lever op til kravene i PED (Direktiv for Trykbærende Udstyr): **<Q>**
11 Namn och adress för det anmälda organ som godkänt uppfyllandet av tryckutrustningsdirektivet: **<Q>**
12 Navn på og adresse til det autoriserte organet som positivt bedømte samsvar med direktivet for trykkutstyr (Pressure Equipment Directive): **<Q>**
13 Sen ilmoitetun elimen nimi ja osoite, joka teki myönteisen päätöksen painelaitedirektiivin noudattamisesta: **<Q>**
14 Název a adresa informovaného orgánu, který vydal pozitivní posouzení shody se směrnicí o tlakových zařízeních: **<Q>**
15 Naziv i adresa prijavljenog tijela koje je donijelo pozitivnu prosudbu o usklađenosti sa Smjernicom za tlačnu opremu: **<Q>**
16 A nyomástartó berendezésekre vonatkozó irányelvnek való megfelelőséget igazoló bejelentett szervezet neve és címe: **<Q>**
17 Nazwa i adres Jednostki notyfikowanej, która wydała pozytywną opinię dotyczącą spełnienia wymogów Dyrektywy dot. Urządzeń Ciśnieniowych: **<Q>**
18 Denumirea şi adresa organismului notificat care a apreciat pozitiv conformarea cu Directiva privind echipamentele sub presiune: **<Q>**
19 Ime in naslov organa za ugotavljanje skladnosti, ki je pozitivno ocenil združljivost z Direktivo o tlačni opremi: **<Q>**
20 Teavitatud organi, mis hindas Surveseadmete Direktiiviga ühilduvust positiivselt, nimi ja aadress: **<Q>**
21 Наименование и адрес на упълномощения орган, който се е произнесъл положително относно съвместимостта с Директивата за оборудване под налягане: **<Q>**
22 Atsakingos institucijos, kuri davė teigiamą sprendimą pagal slėginės įrangos direktyvą pavadinimas ir adresas: **<Q>**
23 Sertifikācijas institūcijas, kura ir devusi pozitīvu slēdzienu par atbilstību Spiediena Iekārtu Direktīvai, nosaukums un adrese: **<Q>**
24 Názov a adresa certifikačného úradu, ktorý kladne posúdil zhodu so smernicou pre tlakové zariadenia: **<Q>**
25 Basınçlı Teçhizat Direktifine uygunluk hususunda olumlu olarak değerlendirilen Onaylanmış kuruluşun adı ve adresi: **<Q>**

<Q> VINÇOTTE nv
Jan Olieslagerslaan 35
1800 Vilvoorde, Belgium

2P452548-2B

DAIKIN

Shigeki Morita
Director
Ostend, 2nd of October 2017

DAIKIN EUROPE N.V.
Zandvoordestraat 300, B-8400 Oostende, Belgium

CE - DECLARATION-OF-CONFORMITY
CE - KONFORMITÄTSERKLÄRUNG
CE - DECLARATION-DE-CONFORMITE
CE - CONFORMITEITSVERKLARING
CE - DECLARACION-DE-CONFORMIDAD
CE - DICHIARAZIONE-DI-CONFORMITA
CE - ΔΗΛΩΣΗ ΣΥΜΜΟΡΦΩΣΗΣ
CE - DECLARAÇÃO-DE-CONFORMIDADE
CE - ЗАЯВЛЕНИЕ-О-СООТВЕТСТВИИ
CE - OVERENSSTEMMELSESERKLÆRING
CE - FÖRSÄKRAN-OM-ÖVERENSTÄMMELSE
CE - ERKLÆRING OM-SAMSVAR
CE - ILMOITUS-YHDENMUKAISUUDESTA
CE - PROHLÁŠENÍ-O-SHODĚ
CE - IZJAVA-O-USKLAĐENOSTI
CE - MEGFELELŐSÉGI-NYILATKOZAT
CE - DEKLARACJA-ZGODNOŚCI
CE - DECLARAŢIE-DE-CONFORMITATE
CE - IZJAVA O SKLADNOSTI
CE - VASTAVUSDEKLARATSIOON
CE - ДЕКЛАРАЦИЯ-ЗА-СЪОТВЕТСТВИЕ
CE - ATITIKTIES-DEKLARACIJA
CE - ATBILSTÍBAS-DEKLARĀCIJA
CE - VYHLÁSENIE-ZHODY
CE - UYGUNLUK-BEYANI

Daikin Europe N.V.

01 (GB) declares under its sole responsibility that the air conditioning models to which this declaration relates:
02 (D) erklärt auf seine alleinige Verantwortung daß die Modelle der Klimageräte für die diese Erklärung bestimmt ist:
03 (F) déclare sous sa seule responsabilité que les appareils d'air conditionné visés par la présente déclaration:
04 (NL) verklaart hierbij op eigen exclusieve verantwoordelijkheid dat de airconditioning units waarop deze verklaring betrekking heeft:
05 (E) declara baja su única responsabilidad que los modelos de aire acondicionado a los cuales hace referencia la declaración:
06 (I) dichiara sotto sua responsabilità che i condizionatori modello a cui è riferita questa dichiarazione:
07 (GR) δηλώνει με αποκλειστική της ευθύνη ότι τα μοντέλα των κλιματιστικών συσκευών στα οποία αναφέρεται η παρούσα δήλωση:
08 (P) declara sob sua exclusiva responsabilidade que os modelos de ar condicionado a que esta declaração se refere:
09 (RUS) заявляет, исключительно под свою ответственность, что модели кондиционеров воздуха, к которым относится настоящее заявление:
10 (DK) erklærer under eneansvar, at klimaanlægmodellerne, som denne deklaration vedrører:
11 (S) deklarerar i egenskap av huvudansvarig, att luftkonditioneringsmodellerna som berörs av denna deklaration innebär att:
12 (N) erklærer et fullstendig ansvar for at de luftkondisjoneringsmodeller som berøres av denne deklarasjon, innebærer at:
13 (FIN) ilmoittaa yksinomaan omalla vastuullaan, että tämän ilmoituksen tarkoittamat ilmastointilaitteiden mallit:
14 (CZ) prohlašuje ve své plné odpovědnosti, že modely klimatizace, k nimž se toto prohlášení vztahuje:
15 (HR) izjavljuje pod isključivo vlastitom odgovornošću da su modeli klima uređaja na koje se ova izjava odnosi:
16 (H) teljes felelőssége tudatában kijelenti, hogy a klímaberendezés modellek, melyekre e nyilatkozat vonatkozik:
17 (PL) deklaruje na własną i wyłączną odpowiedzialność, że modele klimatyzatorów, których dotyczy niniejsza deklaracja:
18 (RO) declară pe proprie răspundere că aparatele de aer condiţionat la care se referă această declaraţie:
19 (SLO) z vso odgovornostjo izjavlja, da so modeli klimatskih naprav, na katere se izjava nanaša:
20 (EST) kinnitab oma täielikul vastutusel, et käesoleva deklaratsiooni alla kuuluvad kliimaseadmete mudelid:
21 (BG) декларира на своя отговорност, че моделите климатична инсталация, за които се отнася тази декларация:
22 (LT) visiška savo atsakomybe skelbia, kad oro kondicionavimo prietaisų modeliai, kuriems yra taikoma ši deklaracija:
23 (LV) ar pilnu atbildību apliecina, ka tālāk uzskaitīto modeļu gaisa kondicionētāji, uz kuriem attiecas šī deklarācija:
24 (SK) vyhlasuje na vlastnú zodpovednosť, že tieto klimatizačné modely, na ktoré sa vzťahuje toto vyhlásenie:
25 (TR) tamamen kendi sorumluluğunda olmak üzere bu bildirinin ilgili olduğu klima modellerinin aşağıdaki gibi olduğunu beyan eder:

LRLEQ3BY1*, LRLEQ4BY1*,

* = , , 1, 2, 3, ..., 9

01 are in conformity with the following standard(s) or other normative document(s), provided that these are used in accordance with our instructions:
02 der/den folgenden Norm(en) oder einem anderen Normdokument oder - dokumenten entspricht/entsprechen, unter der Voraussetzung, daß sie gemäß unseren Anweisungen eingesetzt werden:
03 sont conformes à la/aux norme(s) ou autre(s) document(s) normatif(s), pour autant qu'ils soient utilisés conformément à nos instructions:
04 conform de volgende norm(en) of één of meer andere bindende documenten zijn, op voorwaarde dat ze worden gebruikt overeenkomstig onze instructies:
05 están en conformidad con la(s) siguiente(s) norma(s) u otro(s) documento(s) normativo(s), siempre que sean utilizados de acuerdo con nuestras instrucciones:
06 sono conformi al(i) seguente(i) standard(s) o altro(i) documento(i) a carattere normativo, a patto che vengano usati in conformità alle nostre istruzioni:
07 είναι σύμφωνα με το(α) ακόλουθο(α) πρότυπο(α) ή άλλο έγγραφο(α) κανονισμών, υπό την προϋπόθεση ότι χρησιμοποιούνται σύμφωνα με τις οδηγίες μας:
08 estão em conformidade com a(s) seguinte(s) norma(s) ou outro(s) documento(s) normativo(s), desde que estes sejam utilizados de acordo com as nossas instruções:
09 соответствуют следующим стандартам или другим нормативным документам, при условии их использования согласно нашим инструкциям:
10 overholder følgende standard(er) eller andet/andre retningsgivende dokument(er), forudsat at disse anvendes i henhold til vore instrukser:
11 respektive utrustning är utförd i överensstämmelse med och följer följande standard(er) eller andra normgivande dokument, under förutsättning att användning sker i överensstämmelse med våra instruktioner:
12 respektive utstyr er i overensstemmelse med følgende standard(er) eller andre normgivende dokument(er), under forutsetning av at disse brukes i henhold til våre instrukser:
13 vastaavat seuraavien standardien ja muiden ohjeellisten dokumenttien vaatimuksia edellyttäen, että niitä käytetään ohjeidemme mukaisesti:
14 za předpokladu, že jsou využívány v souladu s našimi pokyny, odpovídají následujícím normám nebo normativním dokumentům:
15 u skladu sa slijedećim standardom(ima) ili drugim normativnim dokumentom(ima), uz uvjet da se oni koriste u skladu s našim uputama:
16 megfelelnek az alábbi szabvány(ok)nak vagy egyéb irányadó dokumentum(ok)nak, ha azokat előírás szerint használják:
17 spełniają wymogi następujących norm i innych dokumentów normalizacyjnych, pod warunkiem że używane są zgodnie z naszymi instrukcjami:
18 sunt în conformitate cu următorul (următoarele) standard(e) sau alt(e) document(e) normativ(e), cu condiţia ca acestea să fie utilizate în conformitate cu instrucţiunile noastre:
19 skladni z naslednjimi standardi in drugimi normativi, pod pogojem, da se uporabljajo v skladu z našimi navodili:
20 on vastavuses järgmis(t)e standardi(te)ga või teiste normatiivsete dokumentidega, kui neid kasutatakse vastavalt meie juhenditele:
21 съответстват на следните стандарти или други нормативни документи, при условие, че се използват съгласно нашите инструкции:
22 atitinka žemiau nurodytus standartus ir (arba) kitus norminius dokumentus su sąlyga, kad yra naudojami pagal mūsų nurodymus:
23 tad, ja lietoti atbilstoši ražotāja norādījumiem, atbilst sekojošiem standartiem un citiem normatīviem dokumentiem:
24 sú v zhode s nasledovnou(ými) normou(ami) alebo iným(i) normatívnym(i) dokumentom(ami), za predpokladu, že sa používajú v súlade s naším návodom:
25 ürünün, talimatlarımıza göre kullanılması koşuluyla aşağıdaki standartlar ve norm belirten belgelerle uyumludur:

EN60335-2-40,

01 following the provisions of:
02 gemäß den Vorschriften der:
03 conformément aux stipulations des:
04 overeenkomstig de bepalingen van:
05 siguiendo las disposiciones de:
06 secondo le prescrizioni per:
07 με τήρηση των διατάξεων των:
08 de acordo com o previsto em:
09 в соответствии с положениями:
10 under iagttagelse af bestemmelserne i:
11 enligt villkoren i:
12 gitt i henhold til bestemmelsene i:
13 noudattaen määräyksiä:
14 za dodržení ustanovení předpisu:
15 prema odredbama:
16 követi a(z):
17 zgodnie z postanowieniami Dyrektyw:
18 în urma prevederilor:
19 ob upoštevanju določb:
20 vastavalt nõuetele:
21 спедвайки клаузите на:
22 laikantis nuostatų, pateikiamų:
23 ievērojot prasības, kas noteiktas:
24 održiavajúc ustanovenia:
25 bunun koşullarına uygun olarak:

Machinery 2006/42/EC	***
Electromagnetic Compatibility 2014/30/EU	*
Pressure Equipment 2014/68/EU	**

01 Directives, as amended.
02 Direktiven, gemäß Änderung.
03 Directives, telles que modifiées.
04 Richtlijnen, zoals geamendeerd.
05 Directivas, según lo enmendado.
06 Direttive, come da modifica.
07 Οδηγιών, όπως έχουν τροποποιηθεί.
08 Directivas, conforme alteração em.
09 Директив со всеми поправками.
10 Direktiver, med senere ændringer.
11 Direktiv, med företagna ändringar.
12 Direktiver, med foretatte endringer.
13 Direktiivejä, sellaisina kuin ne ovat muutettuina.
14 v platném znění.
15 Smjernice, kako je izmijenjeno.
16 irányelv(ek) és módosításaik rendelkezéseit.
17 z późniejszymi poprawkami.
18 Directivelor, cu amendamentele respective.
19 Direktive z vsemi spremembami.
20 Direktiivid koos muudatustega.
21 Директиви, с техните изменения.
22 Direktyvose su papildymais.
23 Direktīvās un to papildinājumos.
24 Smernice, v platnom znení.
25 Değiştirilmiş hallerıyle Yönetmelikler.

01 * as set out in <A> and judged positively by <B> according to the **Certificate** <C>.
** as set out in the Technical Construction File <D> and judged positively by <E> (Applied module <F>). <G>. Risk category <H>. Also refer to next page.
02 * wie in <A> aufgeführt und von <B> positiv beurteilt gemäß **Zertifikat** <C>.
** wie in der Technischen Konstruktionsakte <D> aufgeführt und von <E> (Angewandtes Modul <F>) positiv ausgezeichnet. <G>. Risikoart <H>. Siehe auch nächste Seite.
03 * tel que défini dans <A> et évalué positivement par <B> conformément au **Certificat** <C>.
** tel que stipulé dans le Fichier de Construction Technique <D> et jugé positivement par <E> (Module appliqué <F>). <G>. Catégorie de risque <H>. Se reporter également à la page suivante.
04 * zoals vermeld in <A> en positief beoordeeld door <B> overeenkomstig **Certificaat** <C>.
** zoals vermeld in het Technisch Constructiedossier <D> en in orde bevonden door <E> (Toegepaste module <F>). <G>. Risicocategorie <H>. Zie ook de volgende pagina.
05 * como se establece en <A> y es valorado positivamente por <B> de acuerdo con el **Certificado** <C>.
** tal como se expone en el Archivo de Construcción Técnica <D> y juzgado positivamento por <E> (Modulo aplicado <F>). <G>. Categoría de riesgo <H>. Consulte también la siguiente página.
06 * delineato nel <A> e giudicato positivamente da <B> secondo il **Certificato** <C>.
** delineato nel File Tecnico di Costruzione <D> e giudicato positivamente da <E> (Modulo <F> applicato). <G>. Categoria di rischio <H>. Fare riferimento anche alla pagina successiva.
07 * όπως καθορίζεται στο <A> και κρίνεται θετικά από το <B> σύμφωνα με το **Πιστοποιητικό** <C>.
** όπως προσδιορίζεται στο Αρχείο Τεχνικής Κατασκευής <D> και κρίνεται θετικά από το <E> (Χρησιμοποιούμενη υπομονάδα <F>). <G>. Κατηγορία επικινδυνότητας <H>. Ανατρέξτε επίσης στην επόμενη σελίδα.
08 * tal como estabelecido em <A> e com o parecer positivo de <B> de acordo com o **Certificado** <C>.
** tal como estabelecido no Ficheiro Técnico de Construção <D> e com o parecer positivo de <E> (Módulo aplicado <F>). <G>. Categoria de risco <H>. Consultar também a página seguinte.
09 * как указано в <A> и в соответствии с положительным решением <B> согласно **Свидетельству** <C>.
** как указано в Досье технического топкования <D> и в соответствии с положительным решением <E> (Прикладной модуль <F>). <G>. Категория риска <H>. Также смотрите следующую страницу.
10 * som anført i <A> og positivt vurderet af <B> i henhold til **Certifikat** <C>.
** som anført i den Tekniske Konstruktionsfil <D> og positivt vurderet af <E> (Anvendt modul <F>). <G>. Risikoklasse <H>. Se også næste side.
11 * enligt <A> och godkänts av <B> enligt **Certifikatet** <C>.
** i enlighet med den Tekniska Konstruktionsfilen <D> som positivt intygats av <E> (Fastsatt modul <F>). <G>. Riskkategori <H>. Se även nästa sida.
12 * som det fremkommer i <A> og gjennom positiv bedømmelse av <B> ifølge **Sertifikat** <C>.
** som det fremkommer i den Tekniske Konstruksjonsfilen <D> og gjennom positiv bedømmelse av <E> (Anvendt modul <F>). <G>. Risikokategori <H>. Se også neste side.
13 * jotka on esitetty asiakirjassa <A> ja jotka <B> on hyväksynyt **Sertifikaatin** <C> mukaisesti.
** jotka on esitetty Teknisessä Asiakirjassa <D> ja jotka <E> on hyväksynyt (Sovellettu moduli <F>). <G>. Vaaraluokka <H>. Katso myös seuraava sivu.
14 * jak bylo uvedeno v <A> a pozitivně zjištěno <B> v souladu s **osvědčením** <C>.
** jak bylo uvedeno v souboru technické konstrukce <D> a pozitivně zjištěno <E> (použitý modul <F>). <G>. Kategorie rizik <H>. Viz také následující strana.
15 * kako je izloženo u <A> i pozitivno ocijenjeno od strane <B> prema **Certifikatu** <C>.
** kako je izloženo u Datoteci o tehničkoj konstrukciji <D> i pozitivno ocijenjeno od strane <E> (Primijenjen modul <F>). <G>. Kategorija opasnosti <H>. Također pogledajte na slijedećoj stranici.
16 * a(z) <A> alapján, a(z) <B> igazolta a megfelelést, a(z) <C> **tanúsítvány** szerint.
** a(z) <D> műszaki konstrukciós dokumentáció alapján, a(z) <E> igazolta a megfelelést (alkalmazott modul: <F>). <G>. Veszélyességi kategória <H>. Lásd még a következő oldalon.
17 * zgodnie z dokumentacją <A>, pozytywną opinią <B> i **Świadectwem** <C>.
** zgodnie z archiwalną dokumentacją konstrukcyjną <D> i pozytywną opinią <E> (Zastosowany modul <F>). <G>. Kategoria zagrożenia <H>. Patrz także następna strona.
18 * aşa cum este stabilit în <A> şi apreciat pozitiv de <B> în conformitate cu **Certificatul** <C>.
** conform celor stabilite în Dosarul tehnic de construcţie <D> şi apreciate pozitiv de <E> (Modul aplicat <F>). <G>. Categorie de risc <H>. Consultaţi de asemenea pagina următoare.
19 * kot je določeno v <A> in odobreno s strani <B> v skladu s **certifikatom** <C>.
** kot je določeno v tehnični mapi <D> in odobreno s strani <E> (Uporabljen modul <F>). <G>. Kategorija tveganja <H>. Glejte tudi na naslednji strani.
20 * nagu on näidatud dokumendis <A> ja heaks kiidetud <B> järgi vastavalt **sertifikaadile** <C>.
** nagu on näidatud tehnilises dokumentatsioonis <D> ja heaks kiidetud <E> järgi (lisamoodul <F>). <G>. Riskikategooria <H>. Vaadake ka järgmist lehekülge.
21 * както е изложено в <A> и оценено положително от <B> съгласно **Сертификата** <C>.
** както е заложено в Акта за техническа конструкция <D> и оценено положително от <E> (Приложен модул <F>). <G>. Категория риск <H>. Вижте също на следващата страница.
22 * kaip nustatyta <A> ir kaip teigiamai nuspręsta <B> pagal **Sertifikatą** <C>.
** kaip nurodyta Techninėje konstrukcijos byloje <D> ir patvirtinta <E> (taikomas modulis <F>). <G>. Rizikos kategorija <H>. Taip pat žiūrėkite ir kitą puslapį.
23 * kā norādīts <A> un atbilstoši <B> pozitīvajam vērtējumam saskaņā ar **sertifikātu** <C>.
** kā noteikts tehniskajā dokumentācijā <D>, atbilstoši <E> pozitīvajam lēmumam (piekritīgā sadaļa: <F>). <G>. Riska kategorija <H>. Skat. arī nākošo lappusi.
24 * ako bolo uvedené v <A> a pozitívne zistené <B> v súlade s **osvedčením** <C>.
** ako je to stanovené v Súbore technickej konštrukcie <D> a kladne posúdené <E> (Aplikovaný modul <F>). <G>. Kategória nebezpečia <H>. Viď tiež nasledovnú stranu.
25 * <A>'da belirtildiği gibi ve <C> **Sertifikasına** göre <B> tarafından olumlu olarak değerlendirildiği gibi.
** <D> Teknik Yapı Dosyasında belirtildiği gibi ve <E> tarafından olumlu olarak (Uygulanan modül <F>) değerlendirilmiştir. <G>. Risk kategorisi <H>. Ayrıca bir sonraki sayfaya bakın.

<A>	DAIKIN.TCF.023.D3/08-2018
<B>	TÜV (NB0197)
<C>	60127459
<D>	Daikin.TCFP.001
<E>	VINÇOTTE nv (NB0026)
<F>	D1
<G>	—
<H>	II

01*** Daikin Europe N.V. is authorised to compile the Technical Construction File.
02*** Daikin Europe N.V. hat die Berechtigung die Technische Konstruktionsakte zusammenzustellen.
03*** Daikin Europe N.V. est autorisé à compiler le Dossier de Construction Technique.
04*** Daikin Europe N.V. is bevoegd om het Technisch Constructiedossier samen te stellen.
05*** Daikin Europe N.V. está autorizado a compilar el Archivo de Construcción Técnica.
06*** Daikin Europe N.V. è autorizzata a redigere il File Tecnico di Costruzione.
07*** Η Daikin Europe N.V. είναι εξουσιοδοτημένη να συντάξει τον Τεχνικό φάκελο κατασκευής.
08*** A Daikin Europe N.V. está autorizada a compilar a documentação técnica de fabrico.
09*** Компания Daikin Europe N.V. уполномочена составить Комплект технической документации.
10*** Daikin Europe N.V. er autoriseret til at udarbejde de tekniske konstruktionsdata.
11*** Daikin Europe N.V. är bemyndigade att sammanställa den tekniska konstruktionsfilen.
12*** Daikin Europe N.V. har tillatelse til å kompilere den Tekniske konstruksjonsfilen.
13*** Daikin Europe N.V. on valtuutettu laatimaan Teknisen asiakirjan.
14*** Společnost Daikin Europe N.V. má oprávnění ke kompilaci souboru technické konstrukce.
15*** Daikin Europe N.V. je ovlašten za izradu Datoteke o tehničkoj konstrukciji.
16*** A Daikin Europe N.V. jogosult a műszaki konstrukciós dokumentáció összeállítására.
17*** Daikin Europe N.V. ma upoważnienie do zbierania i opracowywania dokumentacji konstrukcyjnej.
18*** Daikin Europe N.V. este autorizat să compileze Dosarul tehnic de construcţie.
19*** Daikin Europe N.V. je pooblaščen za sestavo datoteke s tehnično mapo.
20*** Daikin Europe N.V. on volitatud koostama tehnilist dokumentatsiooni.
21*** Daikin Europe N.V. е оторизирана да състави Акта за техническа конструкция.
22*** Daikin Europe N.V. yra įgaliota sudaryti šį techninės konstrukcijos failą.
23*** Daikin Europe N.V. ir autorizēts sastādīt tehnisko dokumentāciju.
24*** Spoločnosť Daikin Europe N.V. je oprávnená vytvoriť súbor technickej konštrukcie.
25*** Daikin Europe N.V. Teknik Yapı Dosyasını derlemeye yetkilidir.

2P452548-3C

CE - DECLARATION-OF-CONFORMITY
CE - KONFORMITÄTSERKLÄRUNG
CE - DECLARATION-DE-CONFORMITE
CE - CONFORMITEITSVERKLARING

CE - DECLARACION-DE-CONFORMIDAD
CE - DICHIARAZIONE-DI-CONFORMITA
CE - ΔΗΛΩΣΗ ΣΥΜΜΟΡΦΩΣΗΣ

CE - DECLARAÇÃO-DE-CONFORMIDADE
CE - ЗАЯВЛЕНИЕ-О-СООТВЕТСТВИИ
CE - OVERENSSTEMMELSESERKLÆRING
CE - FÖRSÄKRAN-OM-ÖVERENSTÄMMELSE

CE - ERKLÆRING OM-SAMSVAR
CE - ILMOITUŞ-YHDENMUKAISUUDESTA
CE - PROHLÁŠENÍ-O-SHODĚ

CE - IZJAVA-O-USKLAĐENOSTI
CE - MEGFELELŐSÉGI-NYILATKOZAT
CE - DEKLARACJA-ZGODNOŚCI
CE - DECLARAŢIE-DE-CONFORMITATE

CE - IZJAVA O SKLADNOSTI
CE - VASTAVUSDEKLARATSIOON
CE - ДЕКЛАРАЦИЯ-ЗА-СЪОТВЕТСТВИЕ

CE - ATITIKTIES-DEKLARACIJA
CE - ATBILSTĪBAS-DEKLARĀCIJA
CE - VYHLÁSENIE-ZHODY
CE - UYGUNLUK-BEYANI

01 (GB) continuation of previous page:
02 (D) Fortsetzung der vorherigen Seite:
03 (F) suite de la page précédente:
04 (NL) vervolg van vorige pagina:
05 (E) continuación de la página anterior:
06 (I) continua dalla pagina precedente:
07 (GR) συνέχεια από την προηγούμενη σελίδα:
08 (P) continuação da página anterior:
09 (RUS) продолжение предыдущей страницы:
10 (DK) fortsat fra forrige side:
11 (S) fortsättning från föregående sida:
12 (N) fortsettelse fra forrige side:
13 (FIN) jatkoa edelliseltä sivulta:
14 (CZ) pokračování z předchozí strany:
15 (HR) nastavak s prethodne stranice:
16 (H) folytatás az előző oldalról:
17 (PL) ciąg dalszy z poprzedniej strony:
18 (RO) continuarea paginii anterioare:
19 (SLO) nadaljevanje s prejšnje strani:
20 (EST) eelmise leheküljе järg:
21 (BG) продължение от предходната страница:
22 (LT) ankstesnio puslapio tęsinys:
23 (LV) iepriekšējās lappuses turpinājums:
24 (SK) pokračovanie z predchádzajúcej strany:
25 (TR) önceki sayfadan devam:

01 Design Specifications of the models to which this declaration relates:
02 Konstruktionsdaten der Modelle auf die sich diese Erklärung bezieht:
03 Spécifications de conception des modèles auxquels se rapporte cette déclaration:
04 Ontwerpspecificaties van de modellen waarop deze verklaring betrekking heeft:
05 Especificaciones de diseño de los modelos a los cuales hace referencia esta declaración:
06 Specifiche di progetto dei modelli cui fa riferimento la presente dichiarazione:
07 Προδιαγραφές Σχεδιασμού των μοντέλων με τα οποία σχετίζεται η δήλωση:
08 Especificações de projecto dos modelos a que se aplica esta declaração:
09 Проектные характеристики моделей, к которым относится настоящее заявление:
10 Typespecifikationer for de modeller, som denne erklæring vedrører:
11 Designspecifikationer för de modeller som denna deklaration gäller:
12 Konstruksjonsspesifikasjoner for de modeller som berøres av denne deklarasjonen:
13 Tätä ilmoitusta koskevien mallien rakennemäärittely:
14 Specifikace designu modelů, ke kterým se vztahuje toto prohlášení:
15 Specifikacije dizajna za modele na koje se ova izjava odnosi:
16 A jelen nyilatkozat tárgyát képező modellek tervezési jellemzői:
17 Specyfikacje konstrukcyjne modeli, których dotyczy deklaracja:
18 Specificaţiile de proiectare ale modelelor la care se referă această declaraţie:
19 Specifikacije tehničnega načrta za modele, na katere se nanaša ta deklaracija:
20 Deklaratsiooni alla kuuluvate mudelite disainispetsifikatsioonid:
21 Проектни спецификации на моделите, за които се отнася декларацията:
22 Konstrukcinės specifikacijos modelių, kurie susiję su šia deklaracija:
23 To modeļu dizaina specifikācijas, uz kurām attiecas šī deklarācija:
24 Konštrukčné špecifikácie modelu, ktorého sa týka toto vyhlásenie:
25 Bu bildirinin ilgili olduğu modellerin Tasarım Özellikleri:

01 · Maximum allowable pressure (PS): **<K>** (bar)
· Minimum/maximum allowable temperature (TS*):
* TSmin: Minimum temperature at low pressure side: **<L>** (°C)
* TSmax: Saturated temperature corresponding with the maximum allowable pressure (PS): **<M>** (°C)
· Refrigerant: **<N>**
· Setting of pressure safety device: **<P>** (bar)
· Manufacturing number and manufacturing year: refer to model nameplate
02 · Maximal zulässiger Druck (PS): **<K>** (Bar)
· Minimal/maximal zulässige Temperatur (TS*):
* TSmin: Mindesttemperatur auf der Niederdruckseite: **<L>** (°C)
* TSmax: Sättigungstemperatur die dem maximal zulässigen Druck (PS) entspricht: **<M>** (°C)
· Kältemittel: **<N>**
· Einstellung der Druck-Schutzvorrichtung: **<P>** (Bar)
· Herstellungsnummer und Herstellungsjahr: siehe Typenschild des Modells
03 · Pression maximale admise (PS): **<K>** (bar)
· Température minimum/maximum admise (TS*):
* TSmin: température minimum côté basse pression: **<L>** (°C)
* TSmax: température saturée correspondant à la pression maximale admise (PS): **<M>** (°C)
· Réfrigérant: **<N>**
· Réglage du dispositif de sécurité de pression: **<P>** (bar)
· Numéro de fabrication et année de fabrication: se reporter à la plaquette signalétique du modèle
04 · Maximaal toelaatbare druk (PS): **<K>** (bar)
· Minimaal/maximaal toelaatbare temperatuur (TS*):
* TSmin: Minimumtemperatuur aan lagedrukzijde: **<L>** (°C)
* TSmax: Verzadigde temperatuur die overeenstemt met de maximaal toelaatbare druk (PS): **<M>** (°C)
· Koelmiddel: **<N>**
· Instelling van drukbeveiliging: **<P>** (bar)
· Fabricagenummer en fabricagejaar: zie naamplaat model
05 · Presión máxima admisible (PS): **<K>** (bar)
· Temperatura mínima/máxima admisible (TS*):
* TSmin: Temperatura mínima en el lado de baja presión: **<L>** (°C)
* TSmax: Temperatura saturada correspondiente a la presión máxima admisible (PS): **<M>** (°C)
· Refrigerante: **<N>**
· Ajuste del presostato de seguridad: **<P>** (bar)
· Número de fabricación y año de fabricación: consulte la placa de especificaciones técnicas del modelo
06 · Pressione massima consentita (PS): **<K>** (bar)
· Temperatura minima/massima consentita (TS*):
* TSmin: temperatura minima nel lato di bassa pressione: **<L>** (°C)
* TSmax: temperatura satura corrispondente alla pressione massima consentita (PS): **<M>** (°C)
· Refrigerante: **<N>**
· Impostazione del dispositivo di controllo della pressione: **<P>** (bar)
· Numero di serie e anno di produzione: fare riferimento alla targhetta del modello
07 · Μέγιστη επιτρεπόμενη πίεση (PS): **<K>** (bar)
· Ελάχιστη/μέγιστη επιτρεπόμενη θερμοκρασία (TS*):
* TSmin: Ελάχιστη θερμοκρασία για την πλευρά χαμηλής πίεσης: **<L>** (°C)
* TSmax: Κορεσμένη θερμοκρασία που αντιστοιχεί με τη μέγιστη επιτρεπόμενη πίεση (PS): **<M>** (°C)
· Ψυκτικό: **<N>**
· Ρύθμιση της διάταξης ασφάλειας πίεσης: **<P>** (bar)
· Αριθμός κατασκευής και έτος κατασκευής: ανατρέξτε στην πινακίδα αναγνώρισης του μοντέλου
08 · Pressão máxima permitida (PS): **<K>** (bar)
· Temperaturas mínima e máxima permitidas (TS*):
* TSmin: Temperatura mínima em baixa pressão: **<L>** (°C)
* TSmax: Temperatura de saturação correspondente à pressão máxima permitida (PS): **<M>** (°C)
· Refrigerante: **<N>**
· Regulação do dispositivo de segurança da pressão: **<P>** (bar)
· Número e ano de fabrico: consultar a placa de especificações da unidade
09 · Максимально допустимое давление (PS): **<K>** (бар)
· Минимально/Максимально допустимая температура (TS*):
* TSmin: Минимальная температура на стороне низкого давления: **<L>** (°C)
* TSmax: Температура кипения, соответствующая максимально допустимому давлению (PS): **<M>** (°C)
· Хладагент: **<N>**
· Настройка устройства защиты по давлению: **<P>** (бар)
· Заводской номер и год изготовления: смотрите паспортную табличку модели
10 · Maks. tilladt tryk (PS): **<K>** (bar)
· Min./maks. tilladte temperatur (TS*):
* TSmin: Min. temperatur på lavtrykssiden: **<L>** (°C)
* TSmax: Mættet temperatur svarende til maks. tilladte tryk (PS): **<M>** (°C)
· Kølemiddel: **<N>**
· Indstilling af tryksikringsudstyr: **<P>** (bar)
· Produktionsnummer og fremstillingsår: se modellens fabrikksskilt
11 · Maximalt tillåtet tryck (PS): **<K>** (bar)
· Min/max tillåten temperatur (TS*):
* TSmin: Minimumtemperatur på lågtryckssidan: **<L>** (°C)
* TSmax: Mättnadstemperatur som motsvarar maximalt tillåtet tryck (PS): **<M>** (°C)
· Köldmedel: **<N>**
· Inställning för trycksäkerhetsenhet: **<P>** (bar)
· Tillverkningsnummer och tillverkningsår: se modellens namnplåt
12 · Maksimalt tillatt trykk (PS): **<K>** (bar)
· Minimalt/maksimalt tillatt temperatur (TS*):
* TSmin: Minimumstemperatur på lavtrykkssiden: **<L>** (°C)
* TSmax: Metningstemperatur i samsvar med maksimalt tillatt trykk (PS): **<M>** (°C)
· Kjølemedium: **<N>**
· Innstilling av sikkerhetsanordning for trykk: **<P>** (bar)
· Produksjonsnummer og produksjonsår: se modellens merkeplate
13 · Suurin sallittu paine (PS): **<K>** (bar)
· Pienin/suurin sallittu lämpötila (TS*):
* TSmin: Alhaisin matalapainepuolen lämpötila: **<L>** (°C)
* TSmax: Suurinta sallittua painetta (PS) vastaava kyllästyslämpötila: **<M>** (°C)
· Kylmäaine: **<N>**
· Varmuuspainelaitteen asetus: **<P>** (bar)
· Valmistusnumero ja valmistusvuosi: katso mallin nimikilpi
14 · Maximální přípustný tlak (PS): **<K>** (bar)
· Minimální/maximální přípustná teplota (TS*):
* TSmin: Minimální teplota na nízkotlaké straně: **<L>** (°C)
* TSmax: Saturovaná teplota odpovídající maximálnímu přípustnému tlaku (PS): **<M>** (°C)
· Chladivo: **<N>**
· Nastavení bezpečnostního tlakového zařízení: **<P>** (bar)
· Výrobní číslo a rok výroby: viz typový štítek modelu
15 · Najveći dopušten tlak (PS): **<K>** (bar)
· Najniža/najviša dopuštena temperatura (TS*):
* TSmin: Najniža temperatura u području niskog tlaka: **<L>** (°C)
* TSmax: Standardna temperatura koja odgovara najvećem dopuštenom tlaku (PS): **<M>** (°C)
· Rashladno sredstvo: **<N>**
· Postavke sigurnosne naprave za tlak: **<P>** (bar)
· Proizvodni broj i godina proizvodnje: pogledajte natpisnu pločicu modela
16 · Legnagyobb megengedhető nyomás (PS): **<K>** (bar)
· Legkisebb/legnagyobb megengedhető hőmérséklet (TS*):
* TSmin: Legkisebb megengedhető hőmérséklet a kis nyomású oldalon: **<L>** (°C)
* TSmax: A legnagyobb megengedhető nyomásnak (PS) megfelelő telítettségi hőmérséklet: **<M>** (°C)
· Hűtőközeg: **<N>**
· A túlnyomás-kapcsoló beállítása: **<P>** (bar)
· Gyártási szám és gyártási év: lásd a berendezés adattábláján
17 · Maksymalne dopuszczalne ciśnienie (PS): **<K>** (bar)
· Minimalna/maksymalna dopuszczalna temperatura (TS*):
* TSmin: Minimalna temperatura po stronie niskociśnieniowej: **<L>** (°C)
* TSmax: Temperatura nasycenia odpowiadająca maksymalnemu dopuszczalnemu ciśnieniu (PS): **<M>** (°C)
· Czynnik chłodniczy: **<N>**
· Nastawa ciśnieniowego urządzenia bezpieczeństwa: **<P>** (bar)
· Numer fabryczny oraz rok produkcji: patrz tabliczka znamionowa modelu
18 · Presiune maximă admisibilă (PS): **<K>** (bar)
· Temperatură minimă/maximă admisibilă (TS*):
* TSmin: Temperatură minimă pe partea de presiune joasă: **<L>** (°C)
* TSmax: Temperatură de saturaţie corespunzând presiunii maxime admisibile (PS): **<M>** (°C)
· Agent frigorific: **<N>**
· Reglarea dispozitivului de siguranţă pentru presiune: **<P>** (bar)
· Numărul de fabricaţie şi anul de fabricaţie: consultaţi placa de identificare a modelului
19 · Maksimalni dovoljeni tlak (PS): **<K>** (bar)
· Minimalna/maksimalna dovoljena temperatura (TS*):
* TSmin: Minimalna temperatura na nizkotlačni strani: **<L>** (°C)
* TSmax: Nasičena temperatura, ki ustreza maksimalnemu dovoljenemu tlaku (PS): **<M>** (°C)
· Hladivo: **<N>**
· Nastavljanje varnostne naprave za tlak: **<P>** (bar)
· Tovarniška številka in leto proizvodnje: glejte napisno ploščico
20 · Maksimaalne lubatud surve (PS): **<K>** (bar)
· Minimaalne/maksimaalne lubatud temperatuur (TS*):
* TSmin: Minimaalne temperatuur madalsurve küljel: **<L>** (°C)
* TSmax: Maksimaalsele lubatud survele (PS) vastav küllastunud temperatuur: **<M>** (°C)
· Jahutusaine: **<N>**
· Surve turvaseadme seadistus: **<P>** (bar)
· Tootmisnumber ja tootmisaasta: vaadake mudeli andmeplaati
21 · Максимално допустимо налягане (PS): **<K>** (bar)
· Минимално/максимално допустима температура (TS*):
* TSmin: Минимална температура от страната на ниското налягане: **<L>** (°C)
* TSmax: Температура на насищане, съответстваща на максимално допустимото налягане (PS): **<M>** (°C)
· Охладител: **<N>**
· Настройка на предпазното устройство за налягане: **<P>** (bar)
· Фабричен номер и година на производство: вижте табелката на модела
22 · Maksimalus leistinas slėgis (PS): **<K>** (bar)
· Minimali/maksimali leistina temperatūra (TS*):
* TSmin: Minimali temperatūra žemo slėgio pusėje: **<L>** (°C)
* TSmax: Prisotinta temperatūra, atitinkamti maksimalų leistiną slėgį (PS): **<M>** (°C)
· Šaldymo skystis: **<N>**
· Apsauginio slėgio prietaiso nustatymas: **<P>** (bar)
· Gaminio numeris ir pagaminimo metai: žiūrėkite modelio pavadinimo plokštelę
23 · Maksimālais pieļaujamais spiediens (PS): **<K>** (bar)
· Minimālā/maksimālā pieļaujamā temperatūra (TS*):
* TSmin: Minimālā temperatūra zemā spiediena pusē: **<L>** (°C)
* TSmax: Piesātinātā temperatūra saskaņā ar maksimālo pieļaujamo spiedienu (PS): **<M>** (°C)
· Dzesinātājs: **<N>**
· Spiediena drošības ierīces iestatīšana: **<P>** (bar)
· Izgatavošanas numurs un izgatavošanas gads: skat. modeļa izgatavotājuzņēmuma plāksnītie
24 · Maximálny povolený tlak (PS): **<K>** (bar)
· Minimálna/maximálna povolená teplota (TS*):
* TSmin: Minimálna teplota na nízkotlakovej strane: **<L>** (°C)
* TSmax: Nasýtená teplota korešpondujúca s maximálnym povoleným tlakom (PS): **<M>** (°C)
· Chladivo: **<N>**
· Nastavenie tlakového poistného zariadenia: **<P>** (bar)
· Výrobné číslo a rok výroby: nájdete na výrobnom štítku modelu
25 · Izin verilen maksimum basınç (PS): **<K>** (bar)
· Izin verilen minimum/maksimum sıcaklık (TS*):
* TSmin: Düşük basınç tarafındaki minimum sıcaklık: **<L>** (°C)
* TSmax: İzin verilen maksimum basınca (PS) karşı gelen doyma sıcaklığı: **<M>** (°C)
· Soğutucu: **<N>**
· Basınç emniyet düzeninin ayarı: **<P>** (bar)
· İmalat numarası ve imalat yılı: modelin ünite plakasına bakın

<K>	PS	**40 bar**
<L>	TSmin	**–50 °C**
<M>	TSmax	**63 °C**
<N>		**R410A**
<P>		**40 bar**

01 Name and address of the Notified body that judged positively on compliance with the Pressure Equipment Directive: **<Q>**
02 Name und Adresse der benannten Stelle, die positiv unter Einhaltung der Druckanlagen-Richtlinie urteilte: **<Q>**
03 Nom et adresse de l'organisme notifié qui a évalué positivement la conformité à la directive sur l'équipement de pression: **<Q>**
04 Naam en adres van de aangemelde instantie die positief geoordeeld heeft over de conformiteit met de Richtlijn Drukapparatuur: **<Q>**
05 Nombre y dirección del Organismo Notificado que juzgó positivamente el cumplimiento con la Directiva en materia de Equipos de Presión: **<Q>**
06 Nome e indirizzo dell'Ente riconosciuto che ha riscontrato la conformità alla Direttiva sulle apparecchiature a pressione: **<Q>**
07 Όνομα και διεύθυνση του Κοινοποιημένου οργανισμού που απεφάνθη θετικά για τη συμμόρφωση προς την Οδηγία Εξοπλισμών υπό Πίεση: **<Q>**
08 Nome e morada do organismo notificado, que avaliou favoravelmente a conformidade com a directiva sobre equipamentos pressurizados: **<Q>**
09 Название и адрес органа технической экспертизы, принявшего положительное решение о соответствии Директиве об оборудовании под давлением: **<Q>**
10 Navn og adresse på bemyndiget organ, der har foretaget en positiv bedømmelse af, at udstyret lever op til kravene i PED (Direktiv for Trykbærende Udstyr): **<Q>**
11 Namn och adress för det anmälda organ som godkänt uppfyllandet av tryckutrustningsdirektivet: **<Q>**
12 Navn på og adresse til det autoriserte organet som positivt bedømte samsvar med direktivet for trykkutstyr (Pressure Equipment Directive): **<Q>**
13 Sen ilmoitetun elimen nimi ja osoite, joka teki myönteisen päätöksen painelaitedirektiivin noudattamisesta: **<Q>**
14 Název a adresa informovaného orgánu, který vydal pozitivní posouzení shody se směrnicí o tlakových zařízeních: **<Q>**
15 Naziv i adresa prijavljenog tijela koje je donijelo pozitivnu prosudbu o usklađenosti sa Smjernicom za tlačnu opremu: **<Q>**
16 A nyomástartó berendezésekre vonatkozó irányelvnek való megfelelőséget igazoló bejelentett szervezet neve és címe: **<Q>**
17 Nazwa i adres Jednostki notyfikowanej, która wydała pozytywną opinię dotyczącą spełnienia wymogów Dyrektywy dot. Urządzeń Ciśnieniowych: **<Q>**
18 Denumirea şi adresa organismului notificat care a apreciat pozitiv conformarea cu Directiva privind echipamentele sub presiune: **<Q>**
19 Ime in naslov organa za ugotavljanje skladnosti, ki je pozitivno ocenil združljivost z Direktivo o tlačni opremi: **<Q>**
20 Teavitatud organi, mis hindas Surveseadmete Direktiiviga ühilduvust positiivselt, nimi ja aadress: **<Q>**
21 Наименование и адрес на упълномощения орган, който се е произнесъл положително относно съвместимостта с Директивата за оборудване под налягане: **<Q>**
22 Atsakingos institucijos, kuri davė teigiamą sprendimą pagal slėginės įrangos direktyvą pavadinimas ir adresas: **<Q>**
23 Sertifikācijas institūcijas, kura ir devusi pozitīvu slēdzienu par atbilstību Spiediena Iekārtu Direktīvai, nosaukums un adrese: **<Q>**
24 Názov a adresa certifikačného úradu, ktorý kladne posúdil zhodu so smernicou pre tlakové zariadenia: **<Q>**
25 Basınçlı Teçhizat Direktifine uygunluk hususunda olumlu olarak değerlendirilen Onaylanmış kuruluşun adı ve adresi: **<Q>**

<Q> VINÇOTTE nv
Jan Olieslagerslaan 35
1800 Vilvoorde, Belgium

2P452548-3C

DAIKIN

Hiromitsu Iwasaki
Director
Ostend, 3rd of December 2018

DAIKIN EUROPE N.V.
Zandvoordestraat 300, B-8400 Oostende, Belgium

Table of contents

1 About the documentation

1.1 About this document

Target audience

Authorised installers + end users

INFORMATION

This appliance is intended to be used by expert or trained users in shops, in light industry and on farms, or for commercial use by lay persons.

Documentation set

This document is part of a documentation set. The complete set consists of:

- **General safety precautions:**
  - Safety instructions that you must read before installing
  - Format: Paper (in the box of the outdoor unit)
- **Outdoor unit installation and operation manual:**
  - Installation and operation instructions
  - Format: Paper (in the box of the outdoor unit)
- **Installer and user reference guide:**
  - Preparation of the installation, reference data,…
  - Detailed step-by-step instructions and background information for basic and advanced usage
  - Format: Digital files on http://www.daikineurope.com/support-and-manuals/product-information/

Latest revisions of the supplied documentation may be available on the regional Daikin website or via your dealer.

The original documentation is written in English. All other languages are translations.

Technical engineering data

- A **subset** of the latest technical data is available on the regional Daikin website (publicly accessible).
- The **full set** of latest technical data is available on the Daikin extranet (authentication required).

For the installer

2 About the box

2.1 Outdoor unit

2.1.1 To remove the accessories from the outdoor unit

1 Remove the service cover. See "5.1.1 To open the outdoor unit" on page 12.

2 Remove the accessories.

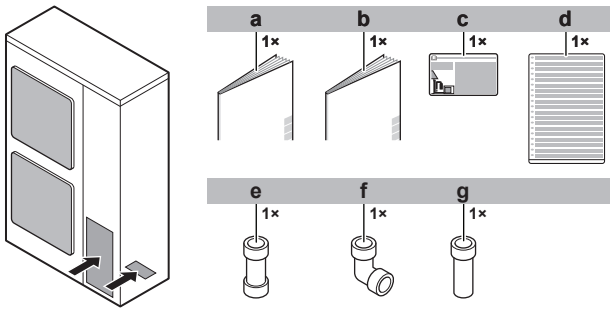

- **a** General safety precautions
- **b** Outdoor unit installation and operation manual
- **c** Fluorinated greenhouse gases label
- **d** Multilingual fluorinated greenhouse gases label
- **e** Gas piping accessory 1 (Ø15.9 mm to 19.1 mm)
- **f** Gas piping accessory 2 (Ø19.1 mm)
- **g** Gas piping accessory 3 (Ø19.1 mm)

2.1.2 To remove the transportation stay

NOTICE

If the unit is operated with the transportation stay attached, abnormal vibration or noise may be generated.

The compressor transportation stay must be removed. It is installed under the compressor leg in order to protect the unit during transport. Proceed as shown in the figure and procedure below.

1 Remove the nut (a) of the compressor mounting bolt.

2 Remove and discard the transportation stay (b).

3 Remove and discard the washer (c).

4 Re-install the nut (a) of the compressor mounting bolt and tighten to 10.1 N•m of torque.

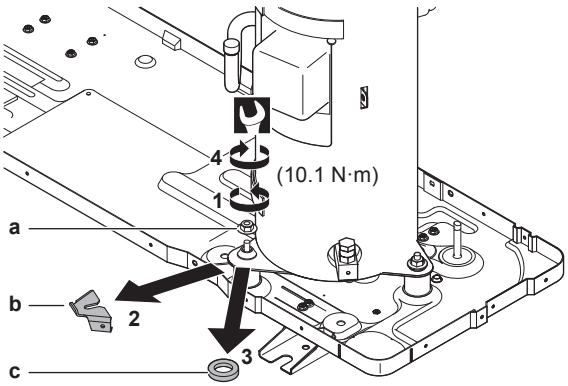

3 About the units

3.1 About the outdoor unit

This installation manual concerns the ZEAS condensing unit.

This unit is intended for outdoor installation and aimed for air to air cooling applications.

Specification	LRMEQ3	LRMEQ4	LRLEQ3	LRLEQ4
Capacity (cooling)	5.90 kW[(a)]	8.40 kW[(a)]	2.78 kW[(b)]	3.62 kW[(b)]
Ambient design temperature (cooling)	–20~43°C DB			

(a) Capacity measured at the following conditions: ambient temperature 32°C, evaporating temperature –10°C, superheat 10 K.

(b) Capacity measured at the following conditions: ambient temperature 32°C, evaporating temperature –35°C, superheat 10 K.

3.2 System layout

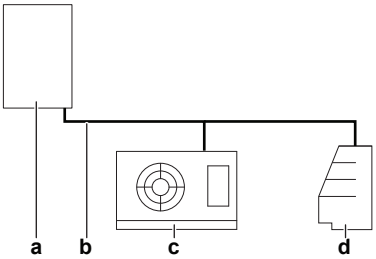

a Outdoor unit (ZEAS condensing unit)
b Refrigerant piping
c Indoor unit (Blower coil)
d Indoor unit (Showcase)

3.3 About the indoor units

NOTICE

To be sure your system setup (outdoor unit+indoor unit(s)) will work, you have to consult the latest technical engineering data for ZEAS condensing unit.

The ZEAS condensing unit can be combined with several types of third party indoor units and is intended for R410A use only.

When installing indoor units, mind the following:

- **Expansion valve**. Install an R410A expansion valve on each indoor unit. Insulate the feeler block of the expansion valve.

INFORMATION

- Install either a mechanical thermostatic expansion valve, or an electronic expansion valve (proportional or pulse type).
- When installing a pulse-type electronic expansion valve, make sure to protect the piping from pressure waves caused by the opening and closing of the valve. The installation of a pulse type expansion valve is the responsibility of the installer.

For more information, see "4.2.7 To select the expansion valve" on page 11.

- **Solenoid valve**. Install an R410A solenoid valve (with an operating differential pressure of 3.5 MPa [35 bar] or more) on the primary side of the expansion valve for each indoor unit.
- **Filter**. Install a filter on the primary side of the solenoid valve for each indoor unit. Determine the filter mesh count based on the size specified by the solenoid valve and the expansion valve being used.
- **Refrigerant flow**. Route the path to the indoor unit heat exchanger so that the refrigerant flow is from top to bottom.
- **Defrosting type**. Use either off-cycle defrosting or electric heater defrosting models. Do NOT use hot-gas defrosting models.

3.3.1 About reusing existing indoor heat exchangers

In some cases you may reuse existing indoor heat exchangers, in other cases not.

Reuse NOT allowed

You may not reuse existing indoor heat exchangers in the following cases:

- When the design pressure is insufficient. Minimum design pressure = 2.5 MPa or 25 bar
- When the path to the heat exchanger has been routed so that the flow of refrigerant is from bottom to top.
- When the copper piping or fan is corroded.
- When the heat exchanger is contaminated. Foreign materials (including oils for fabrication) must be ≤30 mg/10 m.

Reuse allowed

In other cases than above, you may reuse existing indoor heat exchangers. However, if the old condensing unit did NOT use the same refrigerant (R410A) and the same oil (FVC68D) as the new one, you must clean the heat exchanger tubes to remove any residue.

If the old condensing unit did NOT use the same refrigerant (R410A) as the new one, make sure the expansion valve is compatible with R410A.

4 Preparation

4.1 Preparing the installation site

4.1.1 Installation site requirements of the outdoor unit

Mind the spacing guidelines. See the "Technical data" chapter, and the figures on the inside of the front cover.

CAUTION

Appliance not accessible to the general public, install it in a secured area, protected from easy access.

This unit, both indoor and outdoor, is suitable for installation in a commercial and light industrial environment.

NOTICE

This equipment is compliant with Class A of EN55032/CISPR 32. In a residential environment this equipment may cause radio interference.

INFORMATION

The sound pressure level is less than 70 dBA.

4.2 Preparing refrigerant piping

4.2.1 About reusing existing piping

In some cases you may reuse existing piping, in other cases not.

Reuse not allowed

You may not reuse existing piping in the following cases:

- When the compressor in the old installation had problems (example: breakdown). **Possible consequence:** oxidised coolant oil, scale residue and other adverse effects.
- When the indoor and outdoor units were disconnected from the piping for a long time. **Possible consequence:** water and dirt in the piping.
- When the copper piping is corroded.

Reuse allowed

In other cases than above, you may reuse existing piping but keep the following in mind:

Item	Description
Piping diameter	Must comply with requirements. See "4.2.2 Refrigerant piping requirements" on page 10.
Piping material	
Piping length and height difference	

Item	Description
Piping insulation	If deteriorated, must be replaced. Must comply with requirements. See "5.5 To insulate the refrigerant piping" on page 17.
Welded connections	Must be checked for gas leaks.
Cleaning piping	If the old condensing unit did NOT use the same refrigerant (R410A) and the same oil (FVC68D) as the new one, you must clean the piping to remove any residue.

4.2.2 Refrigerant piping requirements

NOTICE

Refrigerant R410A requires strict cautions for keeping the system clean and dry. Foreign materials (including mineral oils or moisture) should be prevented from getting mixed into the system.

NOTICE

The piping and other pressure-containing parts shall be suitable for refrigerant. Use phosphoric acid deoxidised seamless copper for refrigerant.

- Foreign materials inside pipes (including oils for fabrication) must be ≤30 mg/10 m.

4.2.3 Refrigerant piping material

- **Piping material:** Phosphoric acid deoxidised seamless copper.
- **Piping temper grade and thickness:**

Outer diameter (Ø)	Temper grade	Thickness (t)[a]	
6.4 mm (1/4") 9.5 mm (3/8") 12.7 mm (1/2")	Annealed (O)	≥0.80 mm	
15.9 mm (5/8")	Annealed (O)	≥0.99 mm	
19.1 mm (3/4")	Half hard (1/2H)	≥0.80 mm	

(a) Depending on the applicable legislation and the unit's maximum working pressure (see "PS High" on the unit name plate), larger piping thickness might be required.

4.2.4 To select the piping size

Determine the proper size using the following tables and reference figure (only for indication).

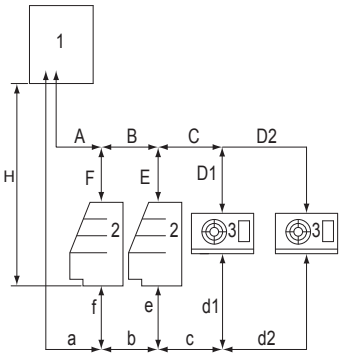

1 Outdoor unit
2 Indoor unit (Showcase)
3 Indoor unit (Blower coil)
A~F Liquid piping
a~f Gas piping
H Height difference outdoor-indoor

In case the required pipe sizes (inch sizes) are not available, it is also allowed to use other diameters (mm sizes), taken the following into account:

- Select the pipe size nearest to the required size.
- Use the suitable adapters for the change-over from inch to mm pipes (field supply).
- The additional refrigerant calculation has to be adjusted as mentioned in "5.6.2 To determine the additional refrigerant amount" on page 17.

A/a: Piping between outdoor unit and piping branching

Liquid piping	Ø9.5 mm[a]
Gas piping	Ø19.1 mm[b]

(a) Same diameter as the connection on the outdoor unit.
(b) Use the accessory piping to adapt the diameter of the outdoor unit stop valve (Ø15.9 mm) to that of the field piping (Ø19.1 mm).

B+C/b+c: Piping between piping branching

Use diameters depending on the total capacity of the indoor units connected downstream.

LRMEQ3+4	Capacity[a]	Piping outer diameter
Liquid piping	<4.0 kW	Ø6.4 mm
	4.0≤x<8.4 kW	Ø9.5 mm
Gas piping	<1.0 kW	Ø9.5 mm
	1.0≤x<6.0 kW	Ø12.7 mm
	6.0≤x<8.4 kW	Ø15.9 mm

(a) For showcases, capacity is calculated at evaporating temperature –10°C. For blower coils, capacity is calculated at temperature difference (= evaporating temperature – room temperature) of 10°C.

LRLEQ3+4	Capacity[a]	Piping outer diameter
Liquid piping	—	Ø6.4 mm
Gas piping	<2.3 kW	Ø12.7 mm
	2.3≤x<3.62 kW	Ø15.9 mm

(a) For showcases, capacity is calculated at evaporating temperature –35°C. For blower coils, capacity is calculated at temperature difference (= evaporating temperature – room temperature) of 10°C.

D~F/d~f: Piping between piping branching and indoor unit

Use the same diameters as the connections (liquid, gas) on the indoor units.

NOTICE

If only 1 indoor unit is connected to the outdoor unit, and the connections on the outdoor unit are different from those on the indoor unit, then use the same piping diameter as the connections on the outdoor unit, and install suitable adapters as near to the indoor unit as possible.

4.2.5 To select refrigerant branch kits

For refrigerant piping branching, it is allowed to use T-joints, Y-joints, refnet joints, and refnet headers. It is possible to use a refrigerant branching option kit from the table below.

Description	Model name
Refnet header[a]	KHRQ22M29H

Description	Model name
Refnet joint[(b)]	KHRQ22M20T
	KHRQ22M29T9

(a) Do NOT connect 2 or more headers in series. For the gas side choose the refnet header so that the diameter of the header is equal to the main piping diameter or equal to one size-up of the main piping diameter.

(b) Choose the refnet joint so that the incoming and outgoing piping diameters match with one of the available diameters of the refnet joint. For more information, see "4.2.3 Refrigerant piping material" on page 10 and "4.2.4 To select the piping size" on page 10.

INFORMATION

Maximum 8 branches can be connected to a header.

4.2.6 Refrigerant piping length and height difference

The piping lengths and height differences must comply with the following requirements.

(see example in "4.2.4 To select the piping size" on page 10)

Requirement		Limit
Maximum actual piping length ▪ Example: a+b+c+d2≤Limit		50 m
Maximum total piping length ▪ Example: a+b+c+d1+d2+e+f≤Limit		80 m
Maximum length first branch kit-indoor unit ▪ Example: b+c+d2≤Limit		30 m
Maximum height difference outdoor-indoor	Outdoor higher than indoor ▪ Example: H≤Limit	20 m
	Outdoor lower than indoor	10 m
Maximum height difference indoor-indoor		5 m

4.2.7 To select the expansion valve

This unit has a larger subcooling ratio for the liquid refrigerant compared to units without a subcooling mechanism, as the liquid refrigerant is being cooled by a double tube heat exchanger (subcooling ratio = condensing temperature–liquid refrigerant temperature at outdoor unit outlet).

When selecting an expansion valve for the load according to the technical information of the expansion valve manufacturer, take into account the subcooling ratio (K) for the liquid refrigerant in the table below.

For LRMEQ3+4

Subcooling ratio (K)						
Te / **Tc**	**–20°C**	**–15°C**	**–10°C**	**–5°C**	**0°C**	**5°C**
20°C	10	9	8	7	6	5
25°C	11	10	9	8	7	6
30°C	12	11	10	9	8	7
35°C	13	12	11	10	9	8
40°C	14	13	12	11	10	9
45°C	15	14	13	12	11	10
50°C	16	15	14	13	12	11
55°C	16	15	14	13	12	11

For LRLEQ3+4

Subcooling ratio (K)						
Te / **Tc**	**–45°C**	**–40°C**	**–35°C**	**–30°C**	**–25°C**	**–20°C**
20°C	19	18	17	16	15	14
25°C	20	19	18	17	16	15
30°C	21	20	19	18	17	16
35°C	22	21	20	19	18	17
40°C	23	22	21	20	19	18
45°C	24	23	22	21	20	19
50°C	25	24	23	22	21	20
55°C	25	24	23	22	21	20

4.3 Preparing electrical wiring

4.3.1 Safety device requirements

Power supply

The power supply must be protected with the required safety devices, i.e. a main switch, a slow blow fuse on each phase and an earth leakage protector in accordance with the applicable legislation.

Selection and sizing of the wiring should be done in accordance with the applicable legislation based on the information mentioned in the table below.

Model	Minimum circuit ampacity	Recommended fuses	Power supply
LRMEQ3 + LRLEQ3	6.5 A	16 A	3N~ 50 Hz 380-415 V
LRMEQ4 + LRLEQ4	9.1 A		

Remote operation switch, low-noise switch and output signals wiring

NOTICE

Remote operation switch. The unit is factory-equipped with an operation switch with which you can turn unit operation ON/OFF. If you want to remotely turn outdoor unit operation ON/OFF, a remote operation switch is required. Use a voltage-free contact for microcurrent (≤1 mA, 12 V DC). Connect to X2M/C+D, and set to "Remote ".

The operation switch is located in the switchbox (see illustration below).

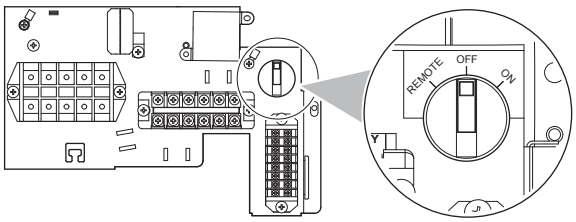

The operation switch can be set to the following three positions:

Operation switch setting	Function
OFF	Unit operation turned OFF
ON	Unit operation turned ON
Remote	Unit controlled (ON/OFF) with remote operation switch

NOTICE

Low-noise switch. If you want to remotely turn ON/OFF low-noise operation (see setting [2-18]), you must install a low-noise switch. Use a voltage-free contact for microcurrent (≤1 mA, 12 V DC). Connect to X2M/A+B.

NOTICE

Output signals. The outdoor unit is provided with a terminal (X3M) that can output 4 different signals. The signal is 220~240 V AC. The maximum load for all signals is 0.5 A. The unit outputs a signal in the following situations:

- C/C1: **caution** signal – connection recommended – when an error occurs that does not stop unit operation.
- C/W1: **warning** signal – connection recommended – when an error occurs that causes unit operation to stop.
- R/P2: **run** signal – connection optional – when the compressor is running.
- P1/P2: **operation** signal – connection mandatory – when the indoor unit solenoid valve is being controlled.

Wiring	Sheathed cable (2 wires) Vinyl cords 0.75~1.25 mm²
Maximum wiring length	130 m

5 Installation

5.1 Opening the units

5.1.1 To open the outdoor unit

DANGER: RISK OF ELECTROCUTION

DANGER: RISK OF BURNING

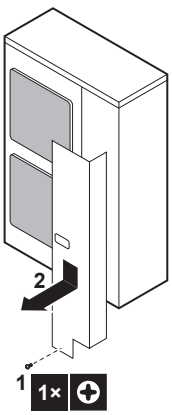

5.2 Mounting the outdoor unit

5.2.1 To provide the installation structure

Prepare 4 sets of anchor bolts, nuts and washers (field supply) as follows:

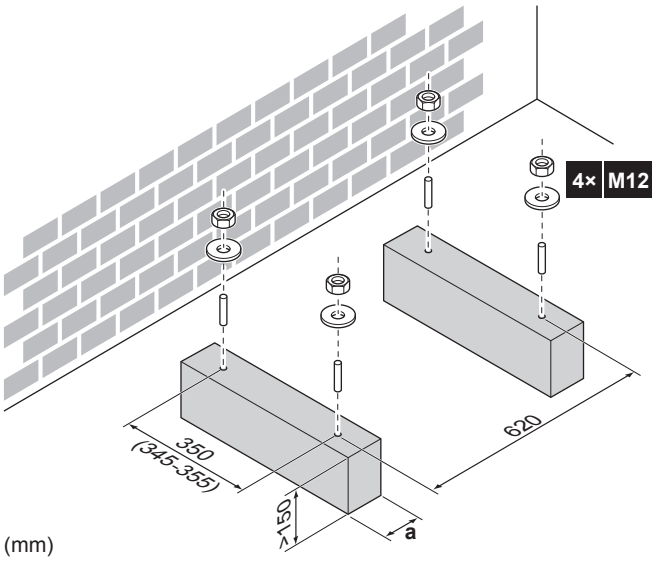

a Make sure not to cover the drain holes.

INFORMATION

The recommended height of the upper protruding part of the bolts is 20 mm.

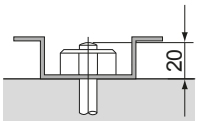

NOTICE

Fix the outdoor unit to the foundation bolts using nuts with resin washers (a). If the coating on the fastening area is stripped off, the nuts rust easily.

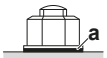

5.2.2 To install the outdoor unit

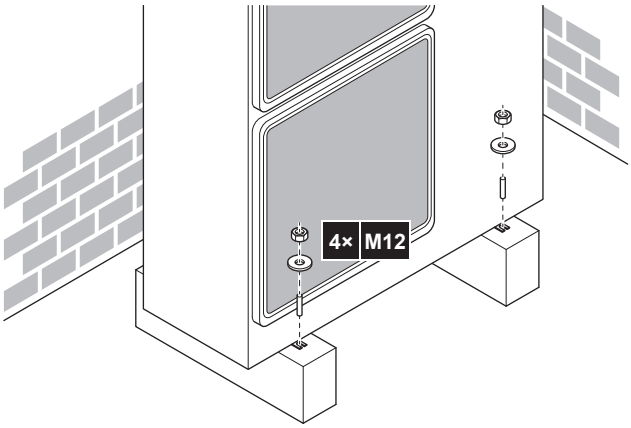

5.2.3 To prevent the outdoor unit from falling over

In case the unit is installed in places where strong wind can tilt the unit, take following measure:

1. Prepare 2 cables as indicated in the following illustration (field supply).
2. Place the 2 cables over the outdoor unit.
3. Insert a rubber sheet between the cables and the outdoor unit to prevent the cables from scratching the paint (field supply).
4. Attach the ends of the cables and tighten them.

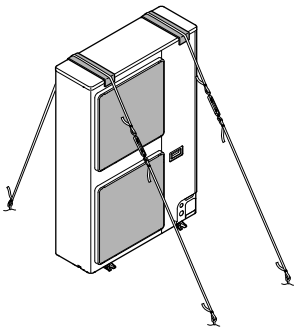

5.3 Connecting the refrigerant piping

DANGER: RISK OF BURNING

5.3.1 Using the stop valve and service port

To handle the stop valve

- Make sure to keep all stop valves open during operation.
- The stop valves are factory closed.

NOTICE

In addition to a gas and liquid stop valve, the outdoor unit has two maintenance stop valves. When connecting the refrigerant piping to the outdoor unit, do NOT operate the maintenance stop valves. The factory setting for these valves is "open". When operating the unit, always leave these valves in the open position. Operating the unit with the valves in the closed position may cause the compressor to fail.

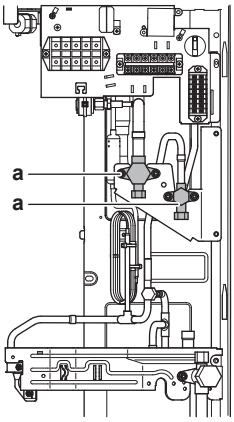

a Maintenance stop valve

To open the stop valve

1. Remove the stop valve cover.
2. Insert a hexagon wrench into the stop valve and turn the stop valve counterclockwise.

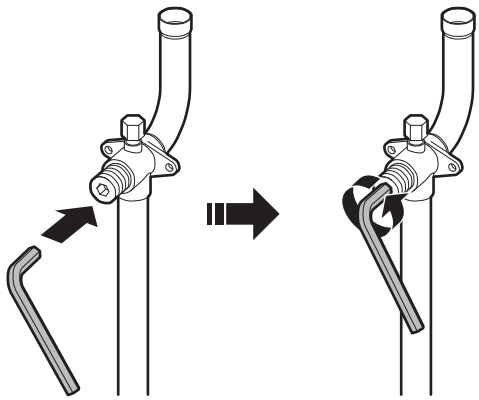

3. When the stop valve cannot be turned any further, stop turning.
4. Install the stop valve cover.

Result: The valve is now open.

To close the stop valve

1. Remove the stop valve cover.
2. Insert a hexagon wrench into the stop valve and turn the stop valve clockwise.

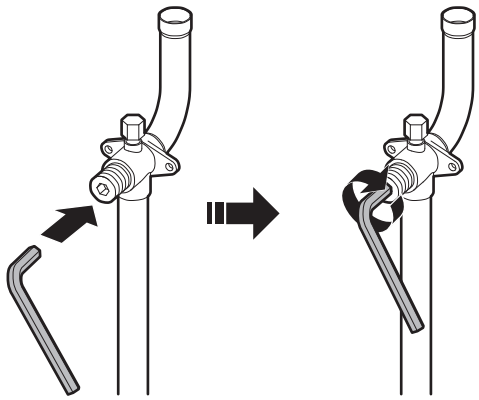

3. When the stop valve cannot be turned any further, stop turning.
4. Install the stop valve cover.

Result: The valve is now closed.

To handle the stop valve cover

- The stop valve cover is sealed where indicated by the arrow. Do NOT damage it.
- After handling the stop valve, tighten the stop valve cover securely, and check for refrigerant leaks. For the tightening torque, refer to the table below.

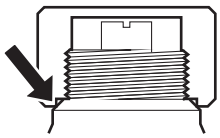

NOTICE

Thread-locking fluid. Before reattaching the stop valve cover, apply thread-locking fluid to the screw thread (NOT to the cover or sealing part). Otherwise, condensation water might enter and freeze. **Possible consequence:** Deformation, refrigerant leakage and compressor malfunction.

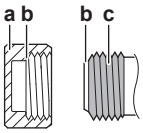

a Cover (do NOT apply thread-locking fluid)

b Sealing part (do NOT apply thread-locking fluid)
c Screw thread with thread-locking fluid

To handle the service port

- Always use a charge hose equipped with a valve depressor pin, since the service port is a Schrader type valve.
- After handling the service port, make sure to tighten the service port cover securely. For the tightening torque, refer to the table below.
- Check for refrigerant leaks after tightening the service port cover.

NOTICE

Thread-locking fluid. Before reattaching the service port cover, apply thread-locking fluid to the screw thread (NOT to the cover or sealing part). Otherwise, condensation water might enter and freeze. **Possible consequence:** Deformation, refrigerant leakage and compressor malfunction.

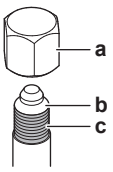

a Cover (do NOT apply thread-locking fluid)
b Sealing part (do NOT apply thread-locking fluid)
c Screw thread with thread-locking fluid

Tightening torques

Stop valve size (mm)	Tightening torque N•m (turn clockwise to close)			
	Shaft			
	Valve body	Hexagonal wrench	Cap (valve lid)	Service port
Ø9.5	5.4~6.6	4 mm	13.5~16.5	11.5~13.9
Ø15.9	13.5~16.5	6 mm	22.5~27.5	

5.3.2 To remove the pinched pipes

WARNING

Any gas or oil remaining inside the stop valve may blow off the pinched piping.

Failure to observe the instructions in procedure below properly may result in property damage or personal injury, which may be serious depending on the circumstances.

Use the following procedure to remove the pinched piping:

1 Remove the valve cover and make sure that the stop valves are fully closed.

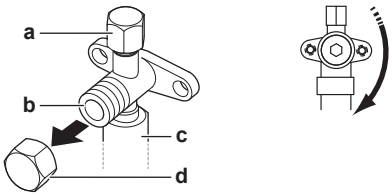

a Service port and service port cover
b Stop valve
c Field piping connection
d Stop valve cover

2 Connect the vacuuming/recovery unit through a manifold to the service port of all stop valves.

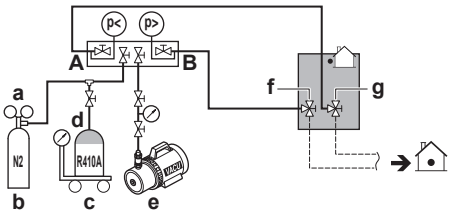

a Pressure reducing valve
b Nitrogen
c Weighing scales
d Refrigerant R410A tank (siphon system)
e Vacuum pump
f Liquid line stop valve
g Gas line stop valve
A Valve A
B Valve B

3 Recover gas and oil from the pinched piping by using a recovery unit.

CAUTION

Do not vent gases into the atmosphere.

4 When all gas and oil is recovered from the pinched piping, disconnect the charge hose and close the service ports

5 Cut off the lower part of the gas and liquid stop valve pipes along the black line. Use an appropriate tool (e.g. a pipe cutter, a pair of nippers).

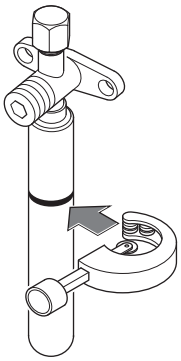

WARNING

Never remove the pinched piping by brazing.

Any gas or oil remaining inside the stop valve may blow off the pinched piping.

6 Wait until all oil has dripped out before continuing with the connection of the field piping in case the recovery was not complete.

5.3.3 Guidelines when installing a sight glass

Install a sight glass on the liquid piping:

Diameter	9.5 mm

Where/how	Install the sight glass before the dryer, as near to the outdoor unit as possible. Install horizontally. 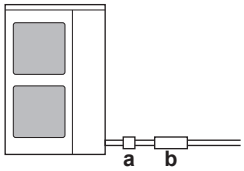 **a** Sight glass **b** Dryer
When brazing	Follow the brazing instructions in the sight glass manual.

5.3.4 Guidelines when installing a dryer

NOTICE

Do NOT operate the unit without a dryer installed. **Possible consequence:** Equipment malfunction.

Install a dryer on the liquid piping:

Dryer type	80 g (100% molecular sieve equivalent) (DML083/DML083S: Danfoss made)
Where/how	Install the dryer after the sight glass, as near to the outdoor unit as possible. Install horizontally. 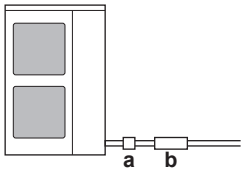 **a** Sight glass **b** Dryer
When brazing	Follow the brazing instructions in the dryer manual. Remove the dryer cap immediately before brazing (to prevent absorption of airborne moisture). If dryer paint burnt during brazing, repair it. For repair paint details, contact the manufacturer.
Flow direction	If the dryer specifies a flow direction, install accordingly.

5.3.5 To connect the refrigerant piping to the outdoor unit

NOTICE

- Be sure to use the supplied accessory pipes when carrying out piping work in the field.
- Be sure that the field installed piping does not touch other pipes, the bottom panel or side panel. Especially for the bottom and side connection, be sure to protect the piping with suitable insulation, to prevent it from coming into contact with the casing.

1 Do the following:

- Remove the service cover (a) with screw (b).
- Remove the piping intake plate (c) with screw (d).

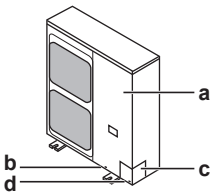

2 Choose a piping route (a, b, or c).

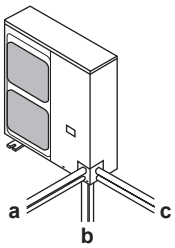

3 If you have chosen the downwards piping route:

- Drill (a, 4×) and remove the knockout hole (b).
- Cut out the slits (c) with a metal saw.

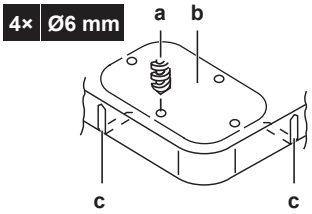

4 Do the following:

- Connect the liquid pipe (a) to the liquid stop valve.
- Connect the gas pipe (b) to the gas stop valve.

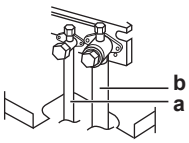

NOTICE

When brazing: First braze the liquid side piping, then the gas side piping. Enter the electrode from the front of the unit and the welding torch from the right side to braze with the flames facing outside and avoid the compressor sound insulation and other piping.

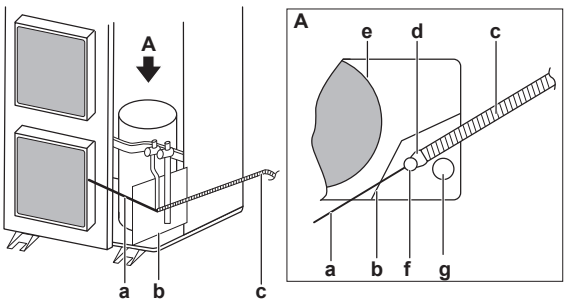

a Electrode

b Burning-resistant plate

c Welding torch

d Flames

e Compressor sound insulation

f Liquid side piping

g Gas side piping

- Connect the gas piping accessories (c, d, e), and cut them to the required length (e1). This is necessary because the size of the gas stop valve is Ø15.9 while the piping between outdoor unit and first refrigerant branch kit is Ø19.1.

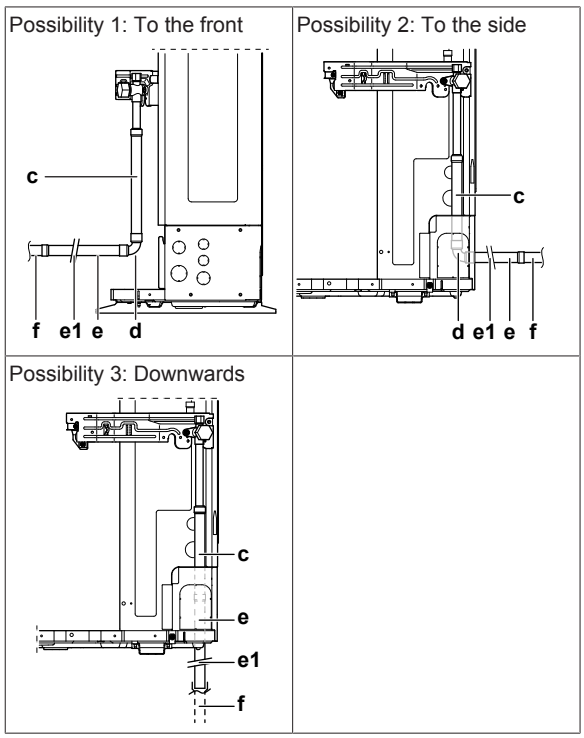

c	Gas piping accessory 1
d	Gas piping accessory 2
e, e1	Gas piping accessory 3 (cut it to the required length)
f	Field supply

5 Reattach the service cover and the piping intake plate.

6 Seal all gaps (example: a) to prevent snow and small animals from entering the system.

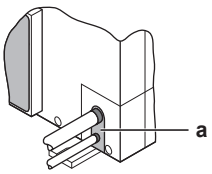

WARNING

Provide adequate measures to prevent that the unit can be used as a shelter by small animals. Small animals that make contact with electrical parts can cause malfunctions, smoke or fire.

NOTICE

Make sure to open the stop valves after installing the refrigerant piping and performing vacuum drying. Running the system with the stop valves closed may break the compressor.

5.4 Checking the refrigerant piping

5.4.1 About checking the refrigerant piping

Checking the refrigerant piping involves:

- Checking for any leakages in the refrigerant piping.
- Performing vacuum drying to remove all moisture, air or nitrogen in the refrigerant piping.

If there is a possibility of moisture being present in the refrigerant piping (for example, water may have entered the piping), first carry out the vacuum drying procedure below until all moisture has been removed.

All piping inside the unit has been factory tested for leaks.

Only field installed refrigerant piping needs to be checked. Therefore, make sure that all the outdoor unit stop valves are firmly closed before performing leak test or vacuum drying.

NOTICE

Make sure that all (field supplied) field piping valves are OPEN (not outdoor unit stop valves!) before you start leak test and vacuuming.

For more information on the state of the valves, refer to "5.4.3 Checking refrigerant piping: Setup" on page 16.

5.4.2 Checking refrigerant piping: General guidelines

Connect the vacuum pump through a manifold to the service port of all stop valves to increase efficiency (refer to "5.4.3 Checking refrigerant piping: Setup" on page 16).

NOTICE

Use a 2-stage vacuum pump with a non-return valve or a solenoid valve that can evacuate to a gauge pressure of –100.7 kPa (−1.007 bar)(5 Torr absolute).

NOTICE

Make sure the pump oil does not flow oppositely into the system while the pump is not working.

NOTICE

Do not purge the air with refrigerants. Use a vacuum pump to evacuate the installation.

5.4.3 Checking refrigerant piping: Setup

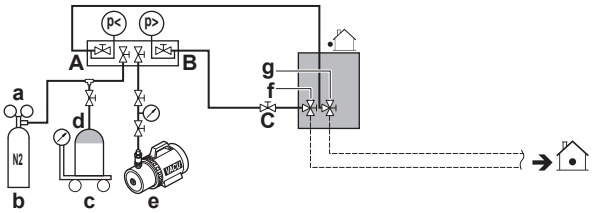

a	Pressure reducing valve
b	Nitrogen
c	Weighing scales
d	Refrigerant R410A tank (siphon system)
e	Vacuum pump
f	Liquid line stop valve
g	Gas line stop valve
A	Valve A
B	Valve B
C	Valve C

Valve	State of valve
Valve A	Open
Valve B	Open
Valve C	Open
Liquid line stop valve	Close
Gas line stop valve	Close

NOTICE

Indoor units should also be leak and vacuum tested. Keep any possible (field supplied) field piping valves open as well.

5.4.4 To perform a leak test

The leak test must satisfy the specifications of EN378-2.

To check for leaks: Vacuum leak test

1. Evacuate the system from the liquid and gas piping to –100.7 kPa (–1.007 bar)(5 Torr absolute) for more than 2 hours.
2. Once reached, turn off the vacuum pump and check that the pressure does not rise for at least 1 minute.
3. Should the pressure rise, the system may either contain moisture (see vacuum drying below) or have leaks.

To check for leaks: Pressure leak test

1. Break the vacuum by pressurising with nitrogen gas to a minimum gauge pressure of 0.2 MPa (2 bar).
   - Never set the gauge pressure of the **high pressure section** of the system higher than the maximum operation pressure of 4.0 MPa (40 bar).
   - Never set the gauge pressure of the **low pressure section** of the system higher than the design pressure of the indoor unit.
2. Test for leaks by applying a bubble test solution to all piping connections.
3. Discharge all nitrogen gas.

NOTICE

Make sure to use a recommended bubble test solution from your wholesaler. Do not use soap water, which may cause cracking of flare nuts (soap water may contain salt, which absorbs moisture that will freeze when the piping gets cold), and/or lead to corrosion of flared joints (soap water may contain ammonia which causes a corrosive effect between the brass flare nut and the copper flare).

5.4.5 To perform vacuum drying

To remove all moisture from the system, proceed as follows:

1. Evacuate the system for at least 2 hours to a target vacuum of –100.7 kPa (–1.007 bar)(5 Torr absolute).
2. Check that, with the vacuum pump turned off, the target vacuum is maintained for at least 1 hour.
3. Should you fail to reach the target vacuum within 2 hours or maintain the vacuum for 1 hour, the system may contain too much moisture. In that case, break the vacuum by pressurising with nitrogen gas to a gauge pressure of 0.05 MPa (0.5 bar) and repeat steps 1 to 3 until all moisture has been removed.
4. Depending on whether you want to immediately charge refrigerant through the service port of the liquid stop valve, or first pre-charge a portion of refrigerant through the liquid line, either open the outdoor unit stop valves, or keep them closed. See "5.6.3 To charge refrigerant" on page 18 for more information.

5.5 To insulate the refrigerant piping

After finishing the leak test and vacuum drying, the piping must be insulated. Take into account the following points:

- Make sure to insulate the connection piping and refrigerant piping branching entirely.
- Be sure to insulate the liquid and gas piping (for all units).
- Take the following into account when determining the insulation thickness:

	LRMEQ*	LRLEQ*
Liquid pipe minimum temperature	5°C	0°C
Gas pipe minimum temperature	–20°C	–45°C

Condensation might form on the surface of the insulation.

- If there is a possibility that condensation on the stop valve might drip down into the indoor unit through gaps in the insulation and piping because the outdoor unit is located higher than the indoor unit, this must be prevented by sealing up the connections. See below figure.

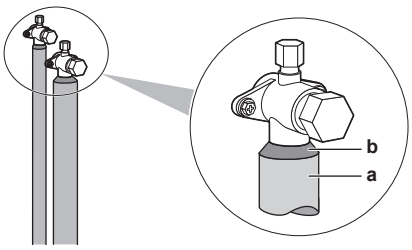

a Insulation material
b Caulking etc.

5.6 Charging refrigerant

5.6.1 Precautions when charging refrigerant

WARNING

- Only use R410A as refrigerant. Other substances may cause explosions and accidents.
- R410A contains fluorinated greenhouse gases. Its global warming potential (GWP) value is 2087.5. Do NOT vent these gases into the atmosphere.
- When charging refrigerant, always use protective gloves and safety glasses.

NOTICE

If the power of some units is turned off, the charging procedure cannot be finished properly.

NOTICE

Before starting charging procedures, check if the 7-LEDs display is as normal (see "6.1.4 To access mode 1 or 2" on page 23). If a malfunction code is present, see "8.1 Solving problems based on error codes" on page 27.

NOTICE

In case of maintenance and the system (outdoor unit+field piping+indoor units) does not contain any refrigerant any more (e.g., after refrigerant reclaim operation), the unit has to be charged with its original amount of refrigerant (refer to the nameplate on the unit) and the determined additional refrigerant amount.

5.6.2 To determine the additional refrigerant amount

INFORMATION

For final charge adjustment in a test laboratory, contact your dealer.

INFORMATION

If only showcase units are used, parameter **B=0**. If only blower coils will be used, parameter **A=0**.

INFORMATION

If **R≤0**, there is no need to charge/recover additional refrigerant.

Formula for LRMEQ3+4

$R=[(X_1 \times \mathbf{Ø9.5}) \times 0.06+(X_2 \times \mathbf{Ø6.4}) \times 0.02]+A+B$

- **R** Additional refrigerant to be charged [in kg and rounded off to 1 decimal place]
- **$X_{1...2}$** Total length [m] of liquid piping size at **Øa**
- **A+B** Parameters A (for showcases) and B (for blower coils). See tables below.

Parameter A	
If the total capacity[(a)] of showcases is...	**Then A is...**
<5.0 kW	1.1 kg
5.0≤x<8.4 kW	2.3 kg

(a) Capacity at evaporating temperature of –10°C

Parameter B	
If the total capacity[(a)] of blower coils is...	**Then B is...**
<5.0 kW	0.6 kg
5.0≤x<8.4 kW	1.2 kg

(a) Capacity at temperature difference (= evaporating temperature – room temperature) of 10°C

Formula for LRLEQ3+4

$R=[(X_1 \times \mathbf{Ø9.5}) \times 0.06+(X_2 \times \mathbf{Ø6.4}) \times 0.02]+A+B-2.4$

- **R** Additional refrigerant to be charged [in kg and rounded off to 1 decimal place]
- **$X_{1...2}$** Total length [m] of liquid piping size at **Øa**
- **A** Parameter A (in case showcases are used)=**1.4 kg**
- **B** Parameter B (in case blower coils are used)=**0.6 kg**

Metric piping. When using metric piping, replace the weight factors in the formula by the ones from the following table:

Inch piping		Metric piping	
Piping	**Weight factor**	**Piping**	**Weight factor**
Ø6.4 mm	0.02	Ø6 mm	0.018
Ø9.5 mm	0.06	Ø10 mm	0.066

5.6.3 To charge refrigerant

To speed up the refrigerant charging process, it is recommended to first pre-charge a portion of refrigerant through the liquid line before proceeding with the charging via the refrigerant charging port. It can be skipped, but charging will take longer then.

Pre-charging refrigerant

Pre-charging can be done without compressor operation, by connecting the refrigerant bottle to the service port of the liquid stop valve.

1 Connect as shown. Make sure that all outdoor unit stop valves, as well as valve A are closed.

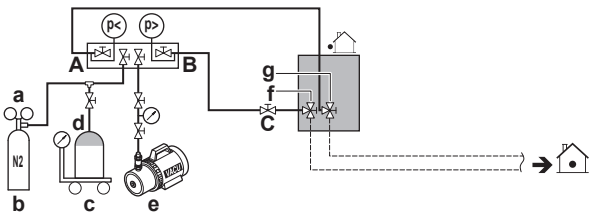

- **a** Pressure reducing valve
- **b** Nitrogen
- **c** Weighing scales
- **d** Refrigerant R410A tank (siphon system)
- **e** Vacuum pump
- **f** Liquid line stop valve
- **g** Gas line stop valve
- **A** Valve A
- **B** Valve B
- **C** Valve C

2 Open valves B and C.

3 Pre-charge refrigerant until the determined additional refrigerant amount is reached or pre-charging is not possible anymore, and then close valves B and C.

4 Do one of the following:

If	Then
The determined additional refrigerant amount is **reached**	Disconnect the manifold from the liquid line. Continue with the **"Checking the sight glass"** instructions.
Too much refrigerant is charged	Recover refrigerant. Disconnect the manifold from the liquid line. Continue with the **"Checking the sight glass"** instructions.
The determined additional refrigerant amount is **not reached** yet	Continue with the **"Charging refrigerant (with the compressor running)"** instructions.

Checking the sight glass

If the determined additional refrigerant amount is **reached by the "Pre-charging refrigerant" instructions**, continue as follows:

5 Open all outdoor unit stop valves.

6 Take all the precautions mentioned in "6 Configuration" on page 22 and "7 Commissioning" on page 25 into account.

7 Turn on the power of the outdoor unit, but leave the operation switch turned off (see "5.7.4 To connect the electrical wiring on the outdoor unit" on page 21).

8 Set the target evaporating temperature with settings [2-0] and [2-1] (see "6.1.8 Mode 2: Field settings" on page 24).

9 Turn on the power of the indoor units.

10 Turn on the operation switch.

Result: The unit will start operation.

INFORMATION

- When a malfunction is detected during the procedure (e.g., in case of closed stop valve), a malfunction code will be displayed. In that case, refer to "5.6.4 Error codes when charging refrigerant" on page 19 and solve the malfunction accordingly.
- Aborting the manual refrigerant charge is possible by turning OFF the operation switch. The unit will stop and return to idle condition.

11 Check the sight glass of the outdoor unit. If the refrigerant is NOT in sealing state, charge extra refrigerant as described in the **"Charging refrigerant (with the compressor running)"** instructions, but do NOT exceed 25% of the determined additional refrigerant amount (see "5.6.2 To determine the additional refrigerant amount" on page 17).

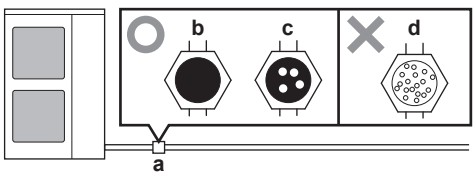

- **O** Sealing state (= sufficient refrigerant)
- **X** Insufficient refrigerant
- **a** Sight glass
- **b** Full of liquid
- **c** A little foam in the liquid
- **d** A lot of foam in the liquid

12 Turn off the operation switch.

Charging refrigerant (with the compressor running)

The remaining additional refrigerant charge can be charged by operating the outdoor unit.

13 Connect as shown. Make sure valve A is closed.

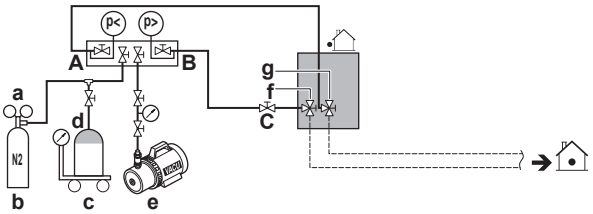

- **a** Pressure reducing valve
- **b** Nitrogen
- **c** Weighing scales
- **d** Refrigerant R410A tank (siphon system)
- **e** Vacuum pump
- **f** Liquid line stop valve
- **g** Gas line stop valve
- **A** Valve A
- **B** Valve B
- **C** Valve C

14 Open the gas line stop valve all the way and adjust the opening of the liquid line stop valve.

15 Take all the precautions mentioned in "6 Configuration" on page 22 and "7 Commissioning" on page 25 into account.

16 Turn on the power of the outdoor unit, but leave the operation switch turned off (see "5.7.4 To connect the electrical wiring on the outdoor unit" on page 21).

17 Set the target evaporating temperature with settings [2-0] and [2-1] (see "6.1.8 Mode 2: Field settings" on page 24).

18 Turn on the power of the indoor units.

19 Turn on the operation switch.

Result: The unit will start operation.

INFORMATION

- When a malfunction is detected during the procedure (e.g., in case of closed stop valve), a malfunction code will be displayed. In that case, refer to "5.6.4 Error codes when charging refrigerant" on page 19 and solve the malfunction accordingly.
- Aborting the manual refrigerant charge is possible by turning OFF the operation switch. The unit will stop and return to idle condition.

20 Open valves B and C.

21 Charge refrigerant until the remaining determined additional refrigerant amount is added (see "5.6.2 To determine the additional refrigerant amount" on page 17), and then close valves C and B.

INFORMATION

- When there is little refrigerant remaining in the cylinder, the cylinder's internal pressure will drop, making it impossible to charge the unit, even if the opening of the liquid line stop valve is adjusted. If this is the case, replace the cylinder with one that has more refrigerant remaining.
- If the piping length is long, replenishing while the liquid line stop valve is fully closed may lead to activation of the protection system, causing the unit to stop operation.

22 Check the sight glass of the outdoor unit. If the refrigerant is NOT in sealing state, charge extra refrigerant, but do NOT exceed 25% of the determined additional refrigerant amount (see "5.6.2 To determine the additional refrigerant amount" on page 17)

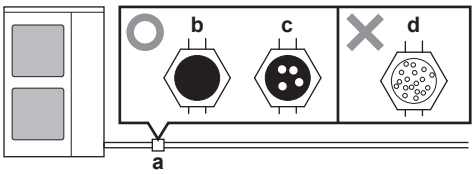

- **O** Sealing state (= sufficient refrigerant)
- **X** Insufficient refrigerant
- **a** Sight glass
- **b** Full of liquid
- **c** A little foam in the liquid
- **d** A lot of foam in the liquid

23 Turn off the operation switch.

NOTICE

Make sure to open all stop valves after (pre-) charging the refrigerant.

Operating with the stop valves closed will damage the compressor.

NOTICE

Thread-locking fluid. Before reattaching the service port cover, apply thread-locking fluid to the screw thread (NOT to the cover or sealing part). Otherwise, condensation water might enter and freeze. **Possible consequence:** Deformation, refrigerant leakage and compressor malfunction.

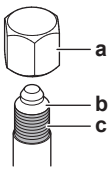

- **a** Cover (do NOT apply thread-locking fluid)
- **b** Sealing part (do NOT apply thread-locking fluid)
- **c** Screw thread with thread-locking fluid

5.6.4 Error codes when charging refrigerant

INFORMATION

When a malfunction occurs, X3M outputs a caution (C/C1) or warning (C/W1) signal, and the H2P LED on the main PCB lights up.

If a malfunction occurs, close valve B and C immediately. Confirm the malfunction code and take corresponding action, "8.1 Solving problems based on error codes" on page 27.

5.6.5 To fix the fluorinated greenhouse gases label

1 Fill in the label as follows:

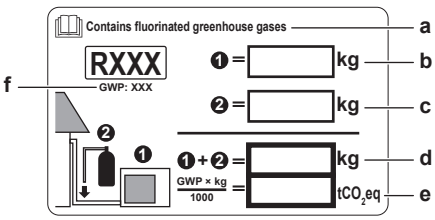

- **a** If a multilingual fluorinated greenhouse gases label is delivered with the unit (see accessories), peel off the applicable language and stick it on top of **a**.
- **b** Factory refrigerant charge: see unit name plate
- **c** Additional refrigerant amount charged
- **d** Total refrigerant charge
- **e** **Greenhouse gas emissions** of the total refrigerant charge expressed as tonnes CO_2 equivalent
- **f** GWP = Global warming potential

NOTICE

In Europe, the **greenhouse gas emissions** of the total refrigerant charge in the system (expressed as tonnes CO_2 equivalent) is used to determine the maintenance intervals. Follow the applicable legislation.

Formula to calculate the greenhouse gas emissions: GWP value of the refrigerant × Total refrigerant charge [in kg] / 1000

2 Fix the label on the inside of the outdoor unit near the gas and liquid stop valves.

5.7 Connecting the electrical wiring

5.7.1 Field wiring: Overview

Field wiring consists of the following:

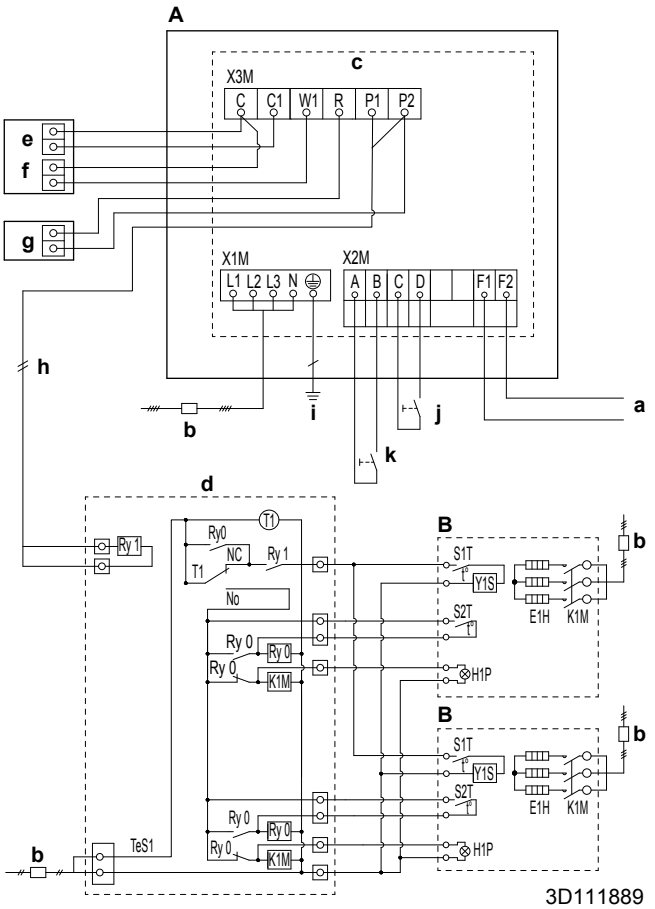

A	Outdoor unit
B	Indoor unit
a	To outdoor unit
b	Earth leakage circuit breaker
c	High voltage wiring intake
d	Control board (field supply)
e	Caution signal
f	Warning signal
g	Run signal
h	Operation signal
i	Earth
j	Remote operation switch
k	OFF: normal mode ON: low-noise mode
T1	Timer
RY0, RY1	Relay
H1P	Defrost indicator
K1M	Contactor defrost heater
E1H	Defrost heater
S1T	Inner temperature adjustment thermostat
S2T	Defrost completion thermostat
Y1S	Solenoid valve

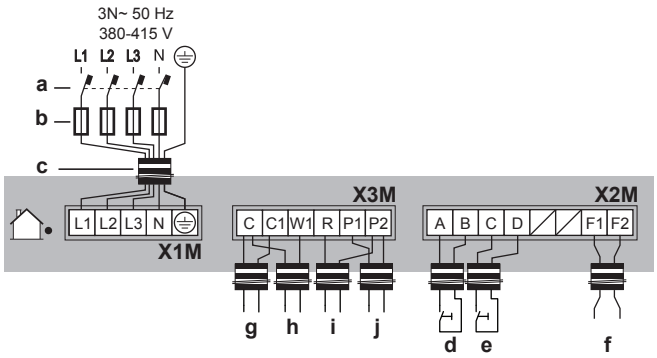

a	Earth leakage circuit breaker
b	Fuse
c	Power supply (including earth) (sheathed cable)
d	Low-noise switch
e	Remote operation switch
f	Transmission
g	Caution signal
h	Warning signal
i	Run signal
j	Operation signal

NOTICE

The operation output P1/P2 of the outdoor unit must be connected to all solenoid valves that are installed upstream of the expansion valves at the indoor unit. This connection is required because the outdoor unit must be able to control the solenoid valves during startup (to prevent liquid refrigerant from entering the compressor) and oil return operation.

NOTICE

Remote operation switch. The unit is factory-equipped with an operation switch with which you can turn unit operation ON/OFF. If you want to remotely turn outdoor unit operation ON/OFF, a remote operation switch is required. Use a voltage-free contact for microcurrent (≤1 mA, 12 V DC). Connect to X2M/C+D, and set to "Remote ".

NOTICE

Low-noise switch. If you want to remotely turn ON/OFF low-noise operation (see setting [2-18]), you must install a low-noise switch. Use a voltage-free contact for microcurrent (≤1 mA, 12 V DC). Connect to X2M/A+B.

NOTICE

Output signals. The outdoor unit is provided with a terminal (X3M) that can output 4 different signals. The signal is 220~240 V AC. The maximum load for all signals is 0.5 A. The unit outputs a signal in the following situations:

- C/C1: **caution** signal – connection recommended – when an error occurs that does not stop unit operation.
- C/W1: **warning** signal – connection recommended – when an error occurs that causes unit operation to stop.
- R/P2: **run** signal – connection optional – when the compressor is running.
- P1/P2: **operation** signal – connection mandatory – when the indoor unit solenoid valve is being controlled.

5.7.2 Guidelines when knocking out knockout holes

NOTICE

Precautions when making knockout holes:

- Avoid damaging the casing.
- After making the knockout holes, we recommend you remove the burrs and paint the edges and areas around the edges using repair paint to prevent rusting.
- When passing electrical wiring through the knockout holes, wrap the wiring with protective tape to prevent damage.

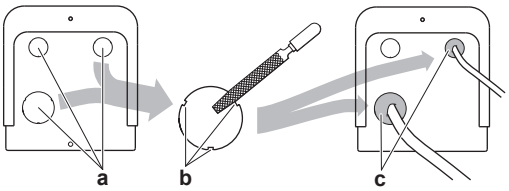

a Knockout hole
b Burr
c Sealant etc.

5.7.3 Guidelines when connecting the electrical wiring

Tightening torques

Wiring	Screw size	Tightening torque (N•m)
X1M: power supply wiring (power supply + shielded ground)	M5	2.2~2.7
X2M: remote operation switch, low-noise switch and transmission output	M3.5	0.8~0.97
X3M: output signals	M4	2.39~2.91

5.7.4 To connect the electrical wiring on the outdoor unit

NOTICE

- Follow the wiring diagram (delivered with the unit, located at the inside of the service cover).
- Make sure the electrical wiring does NOT obstruct proper reattachment of the service cover.

1 Remove the service cover.

2 Connect the **remote operation switch** as follows:

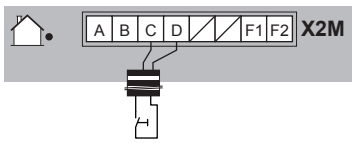

NOTICE

Remote operation switch. The unit is factory-equipped with an operation switch with which you can turn unit operation ON/OFF. If you want to remotely turn outdoor unit operation ON/OFF, a remote operation switch is required. Use a voltage-free contact for microcurrent (≤1 mA, 12 V DC). Connect to X2M/C+D, and set to "Remote ".

3 Connect the **low-noise switch** as follows:

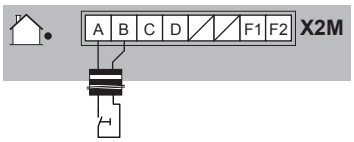

NOTICE

Low-noise switch. If you want to remotely turn ON/OFF low-noise operation (see setting [2-18]), you must install a low-noise switch. Use a voltage-free contact for microcurrent (≤1 mA, 12 V DC). Connect to X2M/A+B.

4 If you want to connect the **modbus communication box**, connect the transmission wiring as follows:

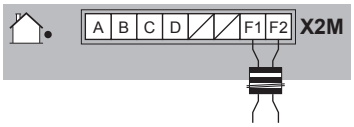

5 Connect the wiring to the **output signals** terminal (X3M) as follows:

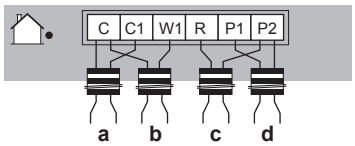

a Caution signal
b Warning signal
c Run signal
d Operation signal

- Respect the following guidelines:

Output signal	Guideline
Caution and **Warning** signal	Connection recommended when system malfunctions are likely to occur.
Run signal	Connection optional.
Operation signal	Connection mandatory. Connect the operation signal to the solenoid valves that are installed upstream of the expansion valves of the indoor unit. The outdoor unit controls the solenoid valve opening: ▪ During start-up, to prevent liquid refrigerant from entering the compressor. ▪ During oil return operation. See "5.7.1 Field wiring: Overview" on page 20 for more details.

CAUTION

When connecting the power supply, the earth connection must be made before the current-carrying connections are established. When disconnecting the power supply, the current-carrying connections must be separated before the earth connection is. The length of the conductors between the power supply stress relief and the terminal block itself must be as such that the current-carrying wires are tautened before the earth wire is in case the power supply is pulled loose from the stress relief.

NOTICE

Never connect the power supply to terminal blocks X2M or X3M. Otherwise the entire system may break down.

NOTICE

Output signals. The outdoor unit is provided with a terminal (X3M) that can output 4 different signals. The signal is 220~240 V AC. The maximum load for all signals is 0.5 A. The unit outputs a signal in the following situations:

- C/C1: **caution** signal – connection recommended – when an error occurs that does not stop unit operation.
- C/W1: **warning** signal – connection recommended – when an error occurs that causes unit operation to stop.
- R/P2: **run** signal – connection optional – when the compressor is running.
- P1/P2: **operation** signal – connection mandatory – when the indoor unit solenoid valve is being controlled.

6 Connect the **power supply** as follows:

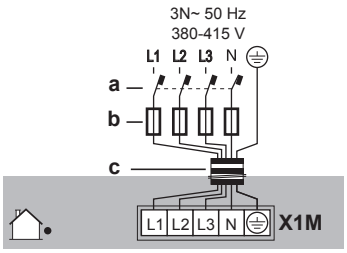

a Earth leakage circuit breaker
b Fuse
c Power supply cable

NOTICE

Keep cables away from the left maintenance stop valve and piping. The valve and piping can get very hot and damage the cables.

7 Fix the cables with cable ties.

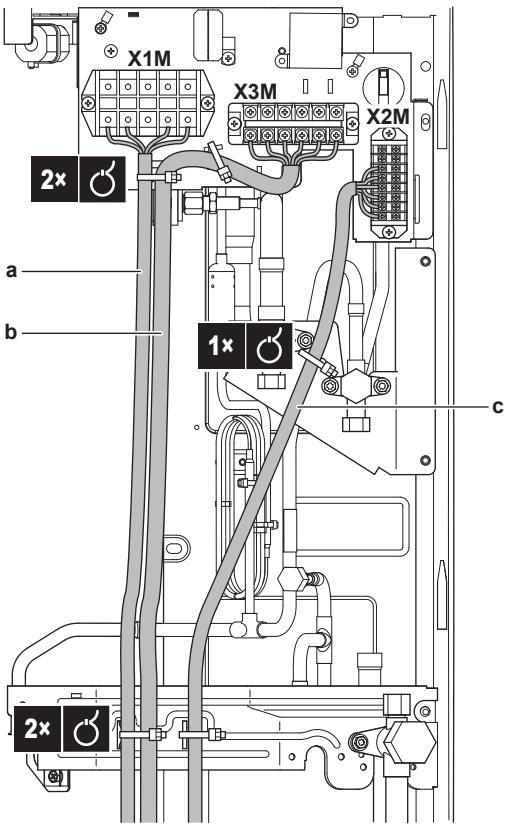

a Power supply (including earth)
b Output signals
c Remote operation switch, low-noise switch, transmission

8 Route the wiring through the frame and connect it to it.

Routing through the frame	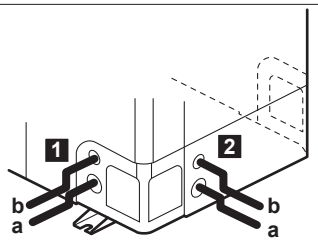 **a** Power supply cable and output signal cables **b** Remote operation switch cable, low-noise switch cable, and transmission cable
Connecting to the frame	When cables are routed from the unit, a protection sleeve for the conduits (PG insertions) can be inserted at the knockout hole. When you do not use a wire conduit, protect the wires with vinyl tubes to prevent the edge of the knockout hole from cutting the wires. 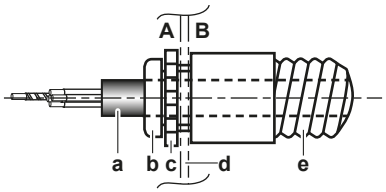 **A** Inside of the outdoor unit **B** Outside of the outdoor unit **a** Wire **b** Bush **c** Nut **d** Frame **e** Hose

9 Reattach the service cover.

10 Connect an earth leakage circuit breaker and fuse to the power supply line.

6 Configuration

INFORMATION

It is important that all information in this chapter is read sequentially by the installer and that the system is configured as applicable.

DANGER: RISK OF ELECTROCUTION

6.1 Making field settings

6.1.1 About making field settings

INFORMATION

The LEDs and buttons are located in the outdoor module (not in the hydro module).

To configure the condensing unit, you must give input to the outdoor unit's main PCB (A1P). This involves the following field setting components:

- Push buttons to give input to the PCB

- A display to read feedback from the PCB

Field settings are defined by their mode, setting and value. Example: [2-1]=2.

PC configurator

It is alternatively possible to make several commissioning field settings through a personal computer interface (for this, option EKPCCAB is required). The installer can prepare the configuration (off-site) on PC and afterwards upload the configuration to the system.

See also: "6.1.9 To connect the PC configurator to the outdoor unit" on page 25.

Mode 1 and 2

Mode	Description
Mode 1 (monitoring settings)	Mode 1 can be used to monitor the current situation of the outdoor unit. Some field setting contents can be monitored as well.
Mode 2 (field settings)	Mode 2 is used to change the field settings of the system. Consulting the current field setting value and changing the current field setting value is possible. In general, normal operation can be resumed without special intervention after changing field settings. Some field settings are used for special operation. In such a case, it is required to abort the special operation before normal operation can restart. It will be indicated in below explanations.

6.1.2 To access the field setting components

See "5.1.1 To open the outdoor unit" on page 12.

6.1.3 Field setting components

NOTICE

The DIP switch (DS1 on A1P) is not used. Do NOT change the factory setting.

The components to make field settings are as follows:

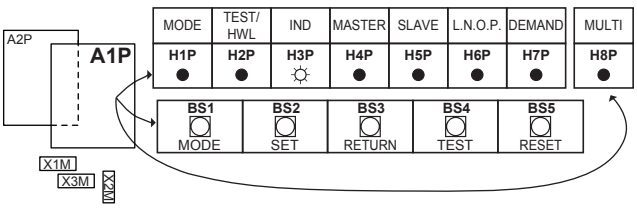

BS1~BS5 Push buttons
H1P~H7P 7-LEDs display
H8P NOT used for field settings
ON (☼) OFF (●) Flashing (◐)

Push buttons

Use the push buttons to make the field settings. Operate the push buttons with an insulated stick (such as a closed ball-point pen) to avoid touching of live parts.

BS1 MODE: For changing the set mode
BS2 SET: For field setting
BS3 RETURN: For field setting
BS4 Not used
BS5 Not used

7-LEDs display

The display gives feedback about the field settings, which are defined as [Mode-Setting]=Value.

H1P Shows the mode
H2P~H7P Shows the settings and values, represented in binary code
H8P NOT used for field settings

Example:

[H1P- 32 + 16 + 8 + 4 + 2 + 1] H1P H2P H3P H4P H5P H6P H7P	Description
● ● ☼ ● ● ● ● (H1P OFF)	Default situation
◐ ● ☼ ● ● ● ● (H1P flashing)	Mode 1
☼ ● ● ● ● ● ● (H1P ON)	Mode 2
☼ ● ● ● ● ● ☼ 0 + 0 + 0 + 0 + 0 + 0 + 1 (H2P~H7P = binary 1)	Setting 1 (in mode 2)
☼ ● ● ◐ ● ● ● 0 + 0 + 8 + 0 + 0 + 0 (H2P~H7P = binary 8)	Value 8 (in mode 2)

6.1.4 To access mode 1 or 2

After the units are turned ON, the display goes to its default situation. From there, you can access mode 1 and mode 2.

Initialisation: default situation

Turn on the power supply of the outdoor unit. After initialisation, the display indication state will be as below (default situation when shipped from factory).

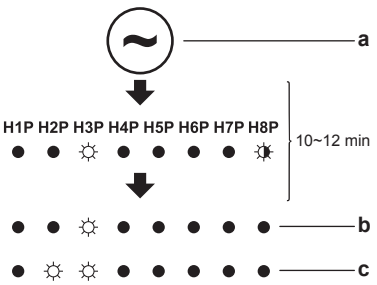

a Power ON
b Default situation
c LED indication when there is a malfunction

If the default situation is not displayed after 10~12 minutes, check the malfunction code. Solve the malfunction code accordingly.

Switching between modes

Use BS1 to switch between the default situation, mode 1 and mode 2.

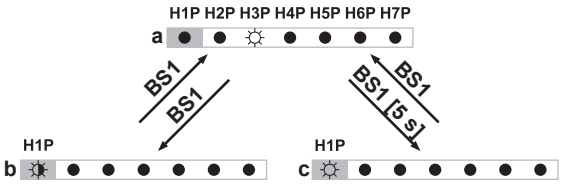

a Default situation (H1P OFF)
b Mode 1 (H1P flashing)
c Mode 2 (H1P ON)
BS1 Press BS1.
BS1 [5 s] Press BS1 for at least 5 s.

INFORMATION

If you get confused in the middle of the process, press BS1 to return to the default situation.

6.1.5 To use mode 1

In mode 1 (and in default situation) you can read out some information.

See "6.1.7 Mode 1 (and default situation): Monitoring settings" on page 24.

Example: 7-LEDs display – Mode 1

See "8.1.1 To display the error codes of the latest malfunctions" on page 27.

6.1.6 To use mode 2

In mode 2 you can make field settings to configure the system.

Example: 7-LEDs display – Mode 2 (example for LRMEQ*)

You can fine-tune the value of setting [2-1] (=T_e target evaporating temperature) to 8 (=+3°C) as follows:

#	Action	Button/display
1	Start from the default situation.	H1P H2P H3P H4P H5P H6P H7P ● ● ☼ ● ● ● ●
2	Select mode 2.	BS1 [5 s] ☼ ● ● ● ● ● ●
3	Select setting 1. ("X×" depends on the setting that you want to select.)	☼ ● ● ● ● ● ☼ (= binary 1)
4	Select value 8 (=+3°C). **a**: Display the current value. **b**: Change until the LED indication corresponds with the LEDs in "6.1.8 Mode 2: Field settings" on page 24. ("X×" depends on the current value, and the value that you want to select.) **c**: Enter the value in the system. **d**: Confirm. The system starts operating according to the setting.	**a** BS3 [1×] ☼ ● ● ● ● ● ● **b** BS2 [X×] ☼ ● ● ☼ ✹ ● ● **c** BS3 [1×] ☼ ● ● ☼ ✹ ● ● **d** BS3 [1×] ☼ ● ● ● ● ● ●
5	Quit mode 2.	BS1 [1×] ● ● ☼ ● ● ● ●

6.1.7 Mode 1 (and default situation): Monitoring settings

In mode 1 (and in default situation) you can read out some information.

7-LEDs display – Default situation (H1P OFF)

You can read out the error code status:

Situation	LED indication
Default	● ● ☼ ● ● ● ●
Error	● ☼ ☼ ● ● ● ●

7-LEDs display – Mode 1 (H1P flashing)

You can read out the following information:

Setting (H1P H2P H3P H4P H5P H6P H7P)	Value / Description
[1-14] ☼ ● ● ☼ ☼ ☼ ● Shows the latest malfunction code.	For more information, see "8.1 Solving problems based on error codes" on page 27.
[1-15] ☼ ● ● ☼ ☼ ☼ ☼ Shows the 2nd last malfunction code.	
[1-16] ☼ ● ☼ ● ● ● ● Shows the 3rd last malfunction code.	

6.1.8 Mode 2: Field settings

In mode 2 you can make field settings to configure the system. The LEDs give a binary representation of the setting/value number.

Setting H1P H2P H3P H4P H5P H6P H7P (= binary)	Value H1P H2P H3P H4P H5P H6P H7P	Description LRMEQ*	Description LRLEQ*
[2-0] ☼ ● ● ● ● ● ● T_e target evaporating temperature. With this setting the target evaporating temperature can be set in increments of 5 K.	☼ ● ● ● ● ● ☼ (default)	–10°C	–35°C
	☼ ● ● ● ● ☼ ●	–20°C	–45°C
	☼ ● ● ● ☼ ● ●	–15°C	–40°C
	☼ ● ● ☼ ● ● ●	–5°C	–30°C
	☼ ● ☼ ● ● ● ●	0°C	–25°C
	☼ ☼ ● ● ● ● ●	5°C	–20°C
[2-1] ☼ ● ● ● ● ● ☼ T_e fine-tuning of evaporating temperature. With this setting the target evaporating temperature set by [2-0] can be fine-tuned in increments of 1 K.	☼ ● ● ● ● ● ☼ (default)	+0°C	
	☼ ● ● ● ● ☼ ●	+1°C	
	☼ ● ● ● ☼ ● ●	+2°C	
	☼ ● ● ☼ ● ● ●	+3°C	
	☼ ● ☼ ● ● ● ●	+4°C	

Setting H1P H2P H3P H4P H5P H6P H7P (= binary)	Value H1P H2P H3P H4P H5P H6P H7P	Description LRMEQ*	Description LRLEQ*
[2-6] ☼ ● ● ● ☼ ☼ ● Address of the outdoor unit for communication with the Modbus communication box (BRR9A1V1). For more information, see the installation manual of the Modbus communication box.	☼ ● ● ● ● ● ●	Address not set	
	☼ ● ● ● ● ● ☼	Address 1	
	☼ ● ● ● ● ☼ ●	Address 2	
	☼ ● ● ● ● ☼ ☼	Address 3	
	☼ ● ● ● ☼ ● ●	Address 4	
	☼ ● ● ● ☼ ● ☼	Address 5	
	...	...	
	☼ ☼ ☼ ☼ ☼ ☼ ☼	Address 63	
[2-13] ☼ ● ● ☼ ☼ ● ☼ Correction of evaporating temperature during low-noise operation. With this setting the target evaporating temperature set with settings [2-0] and [2-1] can be corrected for low-noise operation (see setting [2-18])	☼ ● ● ● ● ● ● (default)	+1°C	
	☼ ● ● ● ● ● ☼	+2°C	
	☼ ● ● ● ● ☼ ●	+3°C	
	☼ ● ● ● ● ☼ ☼	+4°C	
	☼ ● ● ● ☼ ● ●	+5°C	
	☼ ● ● ● ☼ ● ☼	+10°C	
	☼ ● ● ● ☼ ☼ ●	+15°C	
	☼ ● ● ● ☼ ☼ ☼	+20°C	
	☼ ● ● ☼ ● ● ●	+0°C	
	☼ ● ● ☼ ● ● ☼	+25°C	
[2-17] ☼ ● ☼ ● ● ● ☼ Adjustment of fan and compressor speed during low-noise operation. With this setting the maximum fan and compressor speed can be set for low noise operation (see setting [2-18]).	☼ ● ● ● ● ● ☼ (default)	Low noise step 1	
	☼ ● ● ● ● ☼ ●	Low noise step 2	
	☼ ● ● ● ☼ ● ●	Low noise step 3	
	☼ ● ● ☼ ● ● ●	Low noise step 4	
	☼ ● ☼ ● ● ● ●	Low noise step 5	
[2-18] ☼ ● ☼ ● ● ☼ ● Low noise operation With this setting one of three low-noise operation modes can be selected. Low-noise mode can be activated by turning ON the contact between terminals X2M/A and X2M/B. Refer to settings [2-13] and [2-17] to set parameters for the low-noise levels.	☼ ● ● ● ● ● ☼ (default)	Correction of evaporating temperature (only setting [2-13] applies)	
	☼ ● ● ● ● ☼ ●	Adjustment of fan and compressor speed (only setting [2-17] applies)	
	☼ ● ● ● ☼ ● ●	Correction of evaporating temperature and adjustment of fan and compressor speed (both settings [2-13] and [2-17] apply)	

INFORMATION

For LRMEQ3/LRLEQ3 outdoor units, low noise steps 2, 3, and 4 have the same sound reducing effect.

6.1.9 To connect the PC configurator to the outdoor unit

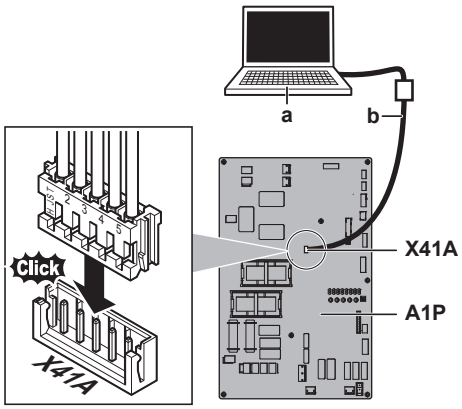

a PC
b Cable (EKPCCAB)
X41A Connector
A1P Outdoor unit main PCB

7 Commissioning

After installation and once the field settings are defined, the installer is obliged to verify correct operation. Therefore a test run MUST be performed according to the procedures described below.

7.1 Precautions when commissioning

CAUTION

Do NOT perform the test operation while working on the indoor units.

When performing the test operation, NOT only the outdoor unit, but the connected indoor unit will operate as well. Working on an indoor unit while performing a test operation is dangerous.

7.2 Checklist before commissioning

After the installation of the unit, first check the following items. Once all below checks are fulfilled, the unit MUST be closed, ONLY then can the unit be powered up.

☐	You read the complete installation and operation instructions, as described in the **installer and user reference guide**.

☐	**Installation** Check that the unit is properly installed, to avoid abnormal noises and vibrations when starting up the unit.
☐	**Field wiring** Be sure that the field wiring has been carried out according to the instructions described in the chapter "5.7 Connecting the electrical wiring" on page 20, according to the wiring diagrams and according to the applicable legislation.
☐	**Power supply voltage** Check the power supply voltage on the local supply panel. The voltage MUST correspond to the voltage on the identification label of the unit.
☐	**Earth wiring** Be sure that the earth wires have been connected properly and that the earth terminals are tightened.
☐	**Insulation test of the main power circuit** Using a megatester for 500 V, check that the insulation resistance of 2 MΩ or more is attained by applying a voltage of 500 V DC between power terminals and earth. NEVER use the megatester for the transmission wiring.
☐	**Fuses, circuit breakers, or protection devices** Check that the fuses, circuit breakers, or the locally installed protection devices are of the size and type specified in the chapter "4.3.1 Safety device requirements" on page 11. Be sure that neither a fuse nor a protection device has been bypassed.
☐	**Internal wiring** Visually check the electrical component box and the inside of the unit for loose connections or damaged electrical components.
☐	**Pipe size and pipe insulation** Be sure that correct pipe sizes are installed and that the insulation work is properly executed.
☐	**Stop valves** Be sure that the stop valves are open on both liquid and gas side.
☐	**Damaged equipment** Check the inside of the unit on damaged components or squeezed pipes.
☐	**Refrigerant leak** Check the inside of the unit on refrigerant leakage. If there is a refrigerant leak, try to repair the leak. If the repair is unsuccessful, call your local dealer. Do not touch any refrigerant which has leaked out from refrigerant piping connections. This may result in frostbite.
☐	**Oil leak** Check the compressor for oil leakage. If there is an oil leak, try to repair the leak. If the repairing is unsuccessful, call your local dealer.
☐	**Air inlet/outlet** Check that the air inlet and outlet of the unit is NOT obstructed by paper sheets, cardboard, or any other material.
☐	**Additional refrigerant charge** The amount of refrigerant to be added to the unit shall be written on the included "Added refrigerant" plate and attached to the rear side of the front cover.

☐	**Installation date and field setting** Be sure to keep record of the installation date on the rear of the front panel according to EN60335-2-40 and keep record of the contents of the field setting(s).

7.3 Checklist during commissioning

☐	To perform a **test run**.

7.3.1 About the test run

Make sure to carry out the system test operation after the first installation.

The procedure below describes the test operation of the complete system.

7.3.2 To perform a test run (7-LEDs display)

1 Make sure all field settings you want are set; see "6.1 Making field settings" on page 22.

2 Turn ON the power to the outdoor unit and the connected indoor units.

3 Turn ON the (remote) operation switch of the outdoor unit.

4 Check the sight glass of the outdoor unit. If the refrigerant is NOT in sealing state, charge extra refrigerant, but do NOT exceed 25% of the determined additional refrigerant amount (see "5.6.2 To determine the additional refrigerant amount" on page 17)

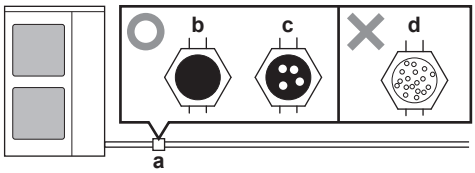

O Sealing state (= sufficient refrigerant)
X Insufficient refrigerant
a Sight glass
b Full of liquid
c A little foam in the liquid
d A lot of foam in the liquid

5 Check if the indoor unit blows cold air, and the room/showcase temperature decreases.

6 Turn OFF the (remote) operation switch of the outdoor unit.

CAUTION

Do NOT turn OFF power by disconnecting the power supply directly. **Possible consequence:**

- The auto restart function of the unit might automatically resume operation after the power supply is reconnected.
- Compressor malfunction.

7 Check the test operation results on the outdoor unit 7-LEDs display.

Completion	Description
Normal completion	● ● ☼ ● ● ● ●
Abnormal completion	● ☼ ☼ ● ● ● ● Refer to "7.3.3 Correcting after abnormal completion of the test run" on page 27 to take actions for correcting the abnormality. When the test operation is fully completed, normal operation is possible.

7.3.3 Correcting after abnormal completion of the test run

The test operation is only completed if no malfunction occurs. In case of a malfunction, perform correcting actions as explained in the error code table (see "8.1.2 Error codes: Overview" on page 27). Carry out the test operation again and confirm that the abnormality is properly corrected.

INFORMATION

When a malfunction occurs, X3M outputs a caution (C/C1) or warning (C/W1) signal, and the H2P LED on the main PCB lights up.

7.3.4 Operating the unit

Once the unit is installed and test operation of outdoor unit and indoor units is finished, the operation of the system can start.

8 Troubleshooting

8.1 Solving problems based on error codes

INFORMATION

When a malfunction occurs, X3M outputs a caution (C/C1) or warning (C/W1) signal, and the H2P LED on the main PCB lights up.

You can display the error codes of the 3 latest malfunctions by using the push buttons and 7-LEDs display (see "6.1.3 Field setting components" on page 23). Error codes consist of 2 characters (example: E3).

After solving the problem, reset the malfunction by turning OFF and ON the operation switch, and retry operation.

8.1.1 To display the error codes of the latest malfunctions

#	Action		Display
1	Start from the default situation.		H1P H2P H3P H4P H5P H6P H7P ■ ● ☼ ● ● ● ●
2	Select mode 1.	BS1 [1×]	☀ ● ● ● ● ● ●
3	Select a malfunction. ("X×" depends on the setting that you want to select.)	BS2 [X×]	**Possible malfunctions:** [1-14] Latest malfunction: ☀ ● ● ☼ ☼ ☼ ● [1-15] 2nd last malfunction: ☀ ● ● ☼ ☼ ☼ ☼ [1-16] 3rd last malfunction: ☀ ● ☼ ● ● ● ●
4	Display the **first character** of the error code.	BS3 [1×]	**Possible characters:** E: ☀ ● ● ● ● ☀ ☀ H: ☀ ● ● ● ☀ ● ● F: ☀ ● ● ● ☀ ● ☀ J: ☀ ● ● ● ☀ ☀ ● L: ☀ ● ● ● ☀ ☀ ☀ P: ☀ ● ● ☀ ● ● ● U: ☀ ● ● ☀ ● ● ☀
5	Display the **second character** of the error code.	BS2 [1×]	**Possible characters:** 1: ☀ ● ● ● ● ● ☀ 2: ☀ ● ● ● ● ☀ ● 3: ☀ ● ● ● ● ☀ ☀ 4: ☀ ● ● ● ☀ ● ● 5: ☀ ● ● ● ☀ ● ☀ 6: ☀ ● ● ● ☀ ☀ ● 7: ☀ ● ● ● ☀ ☀ ☀ 8: ☀ ● ● ☀ ● ● ● 9: ☀ ● ● ☀ ● ● ☀ A: ☀ ● ● ☀ ● ☀ ● C: ☀ ● ● ☀ ☀ ● ●
6	Quit mode 1.	BS1 [1×]	● ● ☼ ● ● ● ●

8.1.2 Error codes: Overview

Code	Description	Criteria	Times of retry	Output signal	Cause	Solution
E3	Abnormally high pressure level	High pressure switch ≥4.0 MPa (40 bar)	0	Warning	▪ The stop valves are closed ▪ Excessive refrigerant charge	▪ Open the gas and liquid stop valves ▪ Recalculate the additional refrigerant charge and recover any excessive refrigerant with a refrigerant recovery machine
		High pressure sensor ≥3.55 MPa (35.5 bar)	3	Warning		

E5	Inverter compressor motor lock	Position signal error	4	Warning	▪ The stop valves are closed
					▪ Incorrect wiring
						▪ Open the gas and liquid stop valves
						▪ Ensure correct
						  ▪ Phase order
						  ▪ Wiring

E7	Outdoor unit fan motor malfunction	Irregular revolution of 1 fan motor	4	Caution	Fan motor malfunction: ▪ M1F - A2P (X106A) ▪ M2F - A2P (X107A)	Check actuator, or connection on PCB
		Irregular revolution of 2 fan motors	4	Warning		
E9	Electronic expansion valve abnormality	No continuity of electronic expansion valve coil	0	Warning	Electronic expansion valve malfunction: Y1E - A1P (X21A)	Check actuator, or connection on PCB
F3	Abnormal discharge pipe temperature	Discharge pipe temperature >150°C	0	Warning	▪ Refrigerant shortage ▪ Defective discharge thermistor or outdoor unit PCB ▪ Clogging of expansion valve for injection	▪ Charge additional refrigerant ▪ Replace defective component ▪ Repair clogging
		▪ Discharge pipe temperature >120°C continuously for 70 seconds or more ▪ Discharge pipe temperature >125°C continuously for 30 seconds or more ▪ Discharge pipe temperature >130°C	14	Warning		
		Discharge pipe temperature >110°C AND Y1E ≥450 pls, continuously for 60 seconds	1	Caution		
			3	Warning		

Code	Description	Criteria	Times of retry	Output signal	Cause	Solution
F4	Wet operation from refrigeration suction pipe	Suction superheat <5 K AND discharge superheat <15 K AND discharge temperature <60°C, continuously for 10 minutes	0	Caution	▪ Excessive frost formation on indoor side ▪ Wrong selection of expansion valves	▪ Adjust defrost cycle ▪ Select the correct type of expansion valve
		In addition to above conditions (for caution): discharge superheat <15 K for 6 hours	0	Warning		
F5	Wet operation from injection pipe	Suction superheat ≥5 K AND discharge superheat <15 K AND discharge temperature <60°C, continuously for 90 minutes	0	Caution	▪ Defective expansion valve, suction pipe thermistor, or subcool heat exchanger outlet thermistor ▪ Refrigerant overcharge	▪ Replace defective component ▪ Adjust refrigerant charge
		In addition to above conditions (for caution): discharge superheat <15 K for 6 hours	0	Warning		
H0	3-sensor error	When 3 or more sensors detect abnormality	0	Warning	▪ Faulty connection of sensor ▪ Defective sensor or outdoor unit PCB	▪ Connect the sensor properly ▪ Replace defective component
H3	High pressure switch failure	No continuity of high pressure switch	0	Warning	▪ Faulty connection of switch ▪ Defective swith or outdoor unit PCB	▪ Connect the switch properly ▪ Replace defective component
H7	Outdoor fan motor signal failure	Abnormal position of signal of 1 fan motor	4	Caution	▪ Abnormal fan motor signal (circuit error) ▪ Broken, short, or disconnected connector of fan motor connection cable ▪ Defective inverter PCB	▪ Ensure correct connection ▪ Replace the fan motor ▪ Replace the inverter PCB
		Abnormal position of signal of 2 fan motors	4	Warning		
H9	Outdoor air thermistor failure	Open circuit or shortcircuit	0	Caution	▪ Faulty connection of sensor ▪ Defective sensor	▪ Connect the sensor properly ▪ Replace defective component
J3	Discharge thermistor failure	Open circuit or shortcircuit	0	Warning	▪ Faulty connection of sensor ▪ Defective sensor	▪ Connect the sensor properly ▪ Replace defective component
J5	Suction thermistor failure	Open circuit or shortcircuit	0	Caution	▪ Faulty connection of sensor ▪ Defective sensor	▪ Connect the sensor properly ▪ Replace defective component
J8	Heat exchanger inlet thermistor failure	Open circuit or shortcircuit	0	Warning	▪ Faulty connection of sensor ▪ Defective sensor	▪ Connect the sensor properly ▪ Replace defective component
J9	Heat exchanger outlet thermistor failure	Open circuit or shortcircuit	0	Warning	▪ Faulty connection of sensor ▪ Defective sensor	▪ Connect the sensor properly ▪ Replace defective component
JA	High pressure sensor failure	Open circuit or shortcircuit	0	Caution	▪ Faulty connection of sensor ▪ Defective sensor	▪ Connect the sensor properly ▪ Replace defective component
JC	Low pressure sensor failure	Open circuit or shortcircuit	0	Warning	▪ Faulty connection of sensor ▪ Defective sensor	▪ Connect the sensor properly ▪ Replace defective component
L1	Inverter PCB malfunction	IGBT error	0	Warning	▪ Defective inverter PCB	▪ Check for external causes (e.g. EMI noise), or replace the inverter PCB.
L4	Radiation fin temperature rise	93°C	9	Warning	▪ Fin temperature rise because of inverter malfunction ▪ Fin temperature rise because of short circuit ▪ Fin thermistor malfunction	▪ Remove any obstacles that block the passage of air to the outdoor unit ▪ Check connection on PCB ▪ Replace defective component
L5	Inverter compressor instantaneous overcurrent	—	9	Warning	—	—
L8	Inverter compressor overcurrent	≥16.1 A	9	Warning	—	—
L9	Defective inverter compressor startup failure	—	4	Warning	—	—
LC	Transmission error between control PCB and inverter PCB	Transmission failure between main PCB and inverter PCB	No limit	Caution	Defective connection between main and inverter PCB	Replace defective component
P1	Inverter compressor power voltage imbalance	—	9	Warning	Unbalanced power supply voltage	Check if power supply is within range
P4	Radiation fin thermistor	Radiation fin thermistor open circuit or short circuit	No limit	Caution	Defective radiation fin thermistor, inverter PCB, inverter compressor, or fan motor	Replace defective component
U1	Reversed phase / Open phase	Reversed phase or open phase	0	Warning	Faulty connection of phase order to power supply terminal X1M	Make sure the phase order to X1M is ok
U2	Inverter compressor abnormal power voltage	—	9	Warning	Insufficient power supply voltage	Make sure there is sufficient power supply voltage

9 Technical data

A **subset** of the latest technical data is available on the regional Daikin website (publicly accessible). The **full set** of latest technical data is available on the Daikin extranet (authentication required).

9.1 Service space: Outdoor unit

When mounting units side by side, the piping route must be to the front, to the back or downwards. In this case the piping route to the side is not possible.
When mounting the units side by side and routing the piping to the back, you must keep a distance of ≥250 mm between the units (instead of ≥100 mm as shown on the figures below).

Single unit ( ) | Single row of units ( )

See figure 1 on the inside of the front cover.

A,B,C,D	Obstacles (walls/baffle plates)
E	Obstacle (roof)
a,b,c,d,e	Minimum service space between the unit and obstacles A, B, C, D and E
e_B	Maximum distance between the unit and the edge of obstacle E, in the direction of obstacle B
e_D	Maximum distance between the unit and the edge of obstacle E, in the direction of obstacle D
H_U	Height of the unit
H_B,H_D	Height of obstacles B and D
1	Seal the bottom of the installation frame to prevent discharged air from flowing back to the suction side through the bottom of the unit.
2	Maximum two units can be installed.
⊘	Not allowed

Multiple rows of units ( )

See figure 2 on the inside of the front cover.

Stacked units (max. 2 levels) ( )

See figure 3 on the inside of the front cover.

A1=>A2	(A1) If there is danger of drainage dripping and freezing between the upper and lower units… (A2) Then install a **roof** between the upper and lower units. Install the upper unit high enough above the lower unit to prevent ice buildup at the upper unit's bottom plate.
B1=>B2	(B1) If there is no danger of drainage dripping and freezing between the upper and lower units… (B2) Then it is not required to install a roof, but **seal the gap** between the upper and lower units to prevent discharged air from flowing back to the suction side through the bottom of the unit.

9.2 Piping diagram: Outdoor unit

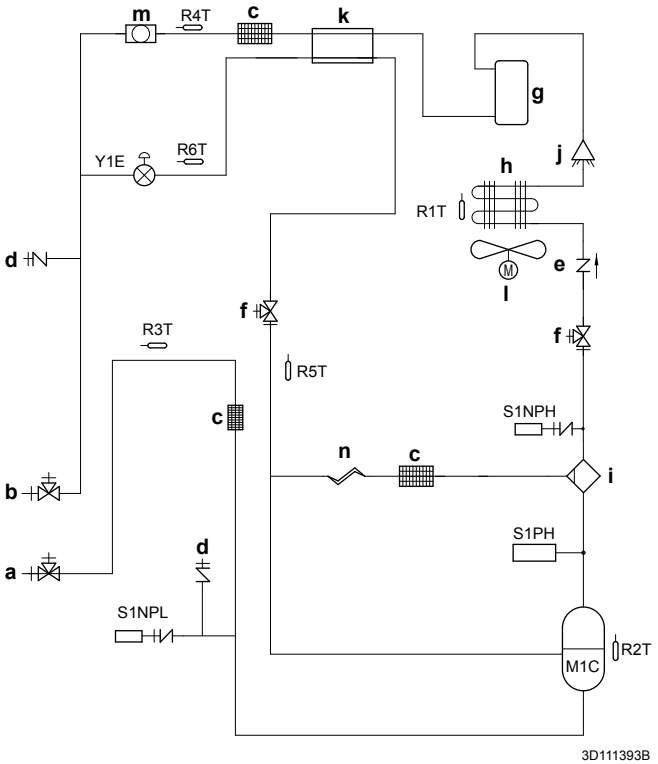

a	Stop valve (gas)
b	Stop valve (liquid)
c	Filter
d	Service port
e	Check valve
f	Maintenance stop valve
g	Liquid receiver
h	Heat exchanger
i	Oil separator
j	Distributor
k	Double tube heat exchanger
l	Propeller fan
m	Sight glass
n	Capillary tube
M1C	Compressor
R1T	Thermistor (air)
R2T	Thermistor (discharge)
R3T	Thermistor (suction)
R4T	Thermistor (Liquid pipe)
R5T	Thermistor (Subcool heat exchanger outlet)
R6T	Thermistor (Subcool heat exchanger inlet)
S1NPH	High pressure sensor
S1NPL	Low pressure sensor
S1PH	High pressure switch
Y1E	Electronic expansion valve (Subcooling)

9.3 Wiring diagram: Outdoor unit

The wiring diagram is delivered with the unit, located at the inside of the service cover.

Symbols:

English	Translation
Symbols	Symbols
X1M	Main terminal
—·—·—·—	Earth wiring
15	Wire number 15
– – – – – – –	Field wire
	Field cable

English	Translation
→ **/12.2	Connection ** continues on page 12 column 2
①	Several wiring possibilities
	Option
	Not mounted in switch box
	Wiring depending on model
	PCB

Notes:

1 Symbols: see above.
2 Refer to the installation or service manual on how to use BS1~BS4 push buttons and DS1-1~DS1-2 switches.
3 Do not operate the unit by short-circuiting protection device S1PH.
4 The capacity of this contact is 220~240 V AC – 0.5 A (total of caution output, warning output, run output, and operation output).
5 The initial setting is "0" (OFF). To operate, set to "1" (REMOTE) or "2" (ON).
6 To use the remote switch, use a voltage-free contact for microcurrent (<1 mA - 12 V DC). For instructions on how to use the remote switch, refer to the technical engineering data.
7 The initial state of SW1 is "open" (normal mode). To activate low-noise mode, close the contact.

Legend for wiring diagram LRMEQ3+4:

A1P	Printed circuit board (main)
A2P	Printed circuit board (inverter)
BS* (A1P)	Push buttons (MODE, SET, RETURN, TEST, RESET)
C* (A2P)	Capacitor
DS1 (A1P)	DIP switch
E, E1 (A1P)	Connector
F1U (A1P)	Fuse (T 31.5 A / 500 V)
F1U (A2P)	Fuse (T 5 A / 250 V)
F2U (A1P)	Fuse (T 31.5 A / 500 V)
F3U	Fuse (T 1.0 A / 250 V)
F3U (A1P)	Fuse (T 6.3 A / 250 V)
F4U	Fuse (T 1.0 A / 250 V)
F4U (A1P)	Fuse (T 6.3 A / 250 V)
F5U (A1P)	Fuse (T 6.3 A / 250 V)
HAP (A*P)	Running LED (service monitor is green)
H*P (A1P)	LED (service monitor is orange)
K1M (A2P)	Magnetic contactor
K*R (A*P)	Magnetic relay
L1R	Reactor
L*A	Connector
M1C	Motor (compressor)
M1F	Motor (fan) (upper)
M2F	Motor (fan) (lower)
NA (A1P)	Connector
P1, P2 (A2P)	Connector
PS (A2P)	Power supply
Q1DI	Earth leakage circuit breaker (field supply)
R1T	Thermistor (air)
R2T	Thermistor (M1C discharge)
R3T	Thermistor (suction)
R4T	Thermistor (liquid pipe)
R5T	Thermistor (subcool heat exchanger outlet)
R6T	Thermistor (subcool heat exchanger inlet)
R10T	Thermistor (fin)
R* (A2P)	Resistor
S1NPH	Pressure sensor (high)
S1NPL	Pressure sensor (low)
S1PH	Pressure switch (high)
S1S	Operation switch (REMOTE/OFF/ON)
SW1	Low-noise mode switch
SW2	External operation switch
U, V, W (A2P)	Connector
V1R (A2P)	IGBT power module
V2R, V3R (A2P)	Diode module
X*A	PCB connector
X*M	Terminal strip
X*Y	Connector
Y1E	Electronic expansion valve (subcool)
Z*C	Noise filter (ferrite core)
Z*F (A1P)	Noise filter

For the user

10 About the system

NOTICE

For future modifications or expansions of your system:

A full overview of allowable combinations (for future system extensions) is available in technical engineering data and should be consulted. Contact your installer to receive more information and professional advice.

10.1 System layout

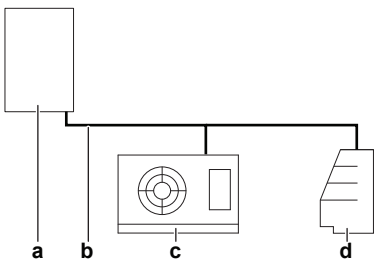

a Outdoor unit (ZEAS condensing unit)
b Refrigerant piping
c Indoor unit (Blower coil)

d Indoor unit (Showcase)

11 Operation

11.1 Operation range

Use the system in the following temperature ranges for safe and effective operation.

	LRMEQ*	LRLEQ*
Outdoor temperature	–20~43°C DB	
Evaporating temperature	–20~5°C	–45~–20°C

11.2 Operating the system

11.2.1 About operating the system

- To start and stop operation of the outdoor unit, use the external operation switch.
- If the main power supply is turned off during operation, operation will restart automatically after the power turns back on again.

12 Maintenance and service

NOTICE

Never inspect or service the unit by yourself. Ask a qualified service person to perform this work.

WARNING

Never replace a fuse with a fuse of a wrong ampere ratings or other wires when a fuse blows out. Use of wire or copper wire may cause the unit to break down or cause a fire.

CAUTION

Do NOT insert fingers, rods or other objects into the air inlet or outlet. Do NOT remove the fan guard. When the fan is rotating at high speed, it will cause injury.

CAUTION

After a long use, check the unit stand and fitting for damage. If damaged, the unit may fall and result in injury.

12.1 About the refrigerant

This product contains fluorinated greenhouse gases. Do NOT vent gases into the atmosphere.

Refrigerant type: R410A

Global warming potential (GWP) value: 2087.5

NOTICE

In Europe, the **greenhouse gas emissions** of the total refrigerant charge in the system (expressed as tonnes CO_2 equivalent) is used to determine the maintenance intervals. Follow the applicable legislation.

Formula to calculate the greenhouse gas emissions: GWP value of the refrigerant × Total refrigerant charge [in kg] / 1000

Please contact your installer for more information.

WARNING

The refrigerant in the system is safe and normally does not leak. If the refrigerant leaks in the room, contact with a fire of a burner, a heater or a cooker may result in a harmful gas.

Turn off any combustible heating devices, ventilate the room and contact the dealer where you purchased the unit.

Do not use the system until a service person confirms that the portion where the refrigerant leaks is repaired.

12.2 After-sales service and warranty

12.2.1 Warranty period

- This product includes a warranty card that was filled in by the dealer at the time of installation. The completed card has to be checked by the customer and stored carefully.
- If repairs to the product are necessary within the warranty period, contact your dealer and keep the warranty card at hand.

12.2.2 Recommended maintenance and inspection

Since dust collects when using the unit for several years, performance of the unit will deteriorate to some extent. As taking apart and cleaning interiors of units requires technical expertise and in order to ensure the best possible maintenance of your units, we recommend to enter into a maintenance and inspection contract on top of normal maintenance activities. Our network of dealers has access to a permanent stock of essential components in order to keep your unit in operation as long as possible. Contact your dealer for more information.

When asking your dealer for an intervention, always state:

- The complete model name of the unit.
- The manufacturing number (stated on the nameplate of the unit).
- The installation date.
- The symptoms or malfunction, and details of the defect.

WARNING

- Do not modify, disassemble, remove, reinstall or repair the unit yourself as incorrect dismantling or installation may cause an electric shock or fire. Contact your dealer.
- In case of accidental refrigerant leaks, make sure there are no naked flames. The refrigerant itself is entirely safe, non-toxic and non-combustible, but it will generate toxic gas when it accidentally leaks into a room where combustible air from fan heaters, gas cookers, etc. is present. Always have qualified service personnel confirm that the point of leakage has been repaired or corrected before resuming operation.

13 Troubleshooting

If system malfunctions are likely to degrade the articles in the room/showcase, you can ask your installer to install an alarm (example: lamp). For more information, contact your installer.

If one of the following malfunctions occur, take the measures shown below and contact your dealer.

WARNING

Stop operation and shut off the power if anything unusual occurs (burning smells etc.).

Leaving the unit running under such circumstances may cause breakage, electric shock or fire. Contact your dealer.

The system MUST be repaired by a qualified service person.

Malfunction	Measure
If a safety device such as a fuse, a breaker or an earth leakage breaker frequently actuates or the ON/OFF switch does not properly work.	Turn off the main power switch.
If water leaks from the unit.	Stop the operation.
The operation switch does not work well.	Turn off the power.

If the system does NOT properly operate except for the above mentioned cases and none of the above mentioned malfunctions is evident, investigate the system according to the following procedures.

Malfunction	Measure
If the system does not operate at all.	▪ Check if there is no power failure. Wait until power is restored. If power failure occurs during operation, the system automatically restarts immediately after power is restored. ▪ Check if no fuse has blown or breaker is activated. Change the fuse or reset the breaker if necessary.
The system stops immediately after starting operation.	▪ Check if air inlet or outlet of outdoor or indoor unit is not blocked by obstacles. Remove any obstacles and make sure the air can flow freely.
The system operates but cooling is insufficient.	▪ Check if air inlet or outlet of outdoor or indoor unit is not blocked by obstacles. Remove any obstacles and make sure the air can flow freely. ▪ Check if the indoor unit is not frosted up. Defrost the unit manually, or shorten the defrost operation cycle. ▪ Check if there are not too many articles inside the room/showcase. Remove a couple of articles. ▪ Check if there is smooth air circulation inside the room/showcase. Reorganise the articles inside the room/showcase. ▪ Check if there is not too much dust on the outdoor unit heat exchanger. Remove the dust with a brush or vacuum cleaner, without using water. If necessary, consult your dealer. ▪ Check if there is cold air leaking outside of the room/showcase. Stop the air from leaking outside. ▪ Check if you did not set the indoor unit setpoint temperature too high. Set the setpoint appropriately. ▪ Check if there are no high-temperature articles stored in the room/showcase. Always store articles after they have cooled down. ▪ Check if the door is not opened too long. Reduce the opening time of the door.

If after checking all above items, it is impossible to fix the problem yourself, contact your installer and state the symptoms, the complete model name of the unit (with manufacturing number if possible) and the installation date (possibly listed on the warranty card).

13.1 Symptoms that are NOT system malfunctions

The following symptoms are NOT system malfunctions:

13.1.1 Symptom: The system does not operate

- The system does not start immediately after it is turned ON again. If the operation lamp lights, the system is in normal condition. To prevent overloading of the compressor motor, the system starts 5 minutes after it is turned ON again in case it was turned OFF just before.
- The system does not start immediately after the power supply is turned on. Wait one minute until the micro computer is prepared for operation.

13.1.2 Symptom: The unit does not stop immediately when operation is stopped

This is to prevent components from being damaged. The unit will stop in a little while.

13.1.3 Symptom: Noise (Outdoor unit)

- A continuous low hissing sound is heard when the system is in cooling operation. This is the sound of refrigerant gas flowing through both indoor and outdoor units.
- A hissing sound which is heard at the start or immediately after stopping operation. This is the noise of refrigerant caused by flow stop or flow change.
- When the tone of operating noise changes. This noise is caused by the change of frequency.

13.1.4 Symptom: Dust comes out of the unit

When the unit is used for the first time in a long time. This is because dust has gotten into the unit.

13.1.5 Symptom: The outdoor unit fan does not spin

During operation. The speed of the fan is controlled in order to optimise product operation.

14 Relocation

Contact your dealer for removing and reinstalling the total unit. Moving units requires technical expertise.

15 Disposal

This unit uses hydrofluorocarbon. Contact your dealer when discarding this unit.

NOTICE

Do NOT try to dismantle the system yourself: dismantling of the system, treatment of the refrigerant, oil and other parts MUST comply with applicable legislation. Units MUST be treated at a specialised treatment facility for reuse, recycling and recovery.

EAC

4P545024-1 0000000I

DAIKIN EUROPE N.V.

Zandvoordestraat 300, B-8400 Oostende, Belgium

4P545024-1 2018.09